SOLARTRON

Instruction Manual

for the

DOUBLE BEAM OSCILLOSCOPE

CT436

JS Cat No. 6625-99-914-2605

CT436A

JS Cat No. 6625-99-945-0503

and their Accessories

Issue	:	Two
Mod. Ref.	:	436/46
Date	:	July, 1962.

SOLARTRON LABORATORY INSTRUMENTS LTD.

COX LANE · CHESSINGTON · SURREY · ENGLAND

Telephone : LOWer Hook 5252 *Cables : Solartron Chessington*

International Telex : 22842 Solartron Chess.

46/2 PRINTED IN ENGLAND

LIST OF CONTENTS.

List of Illustrations

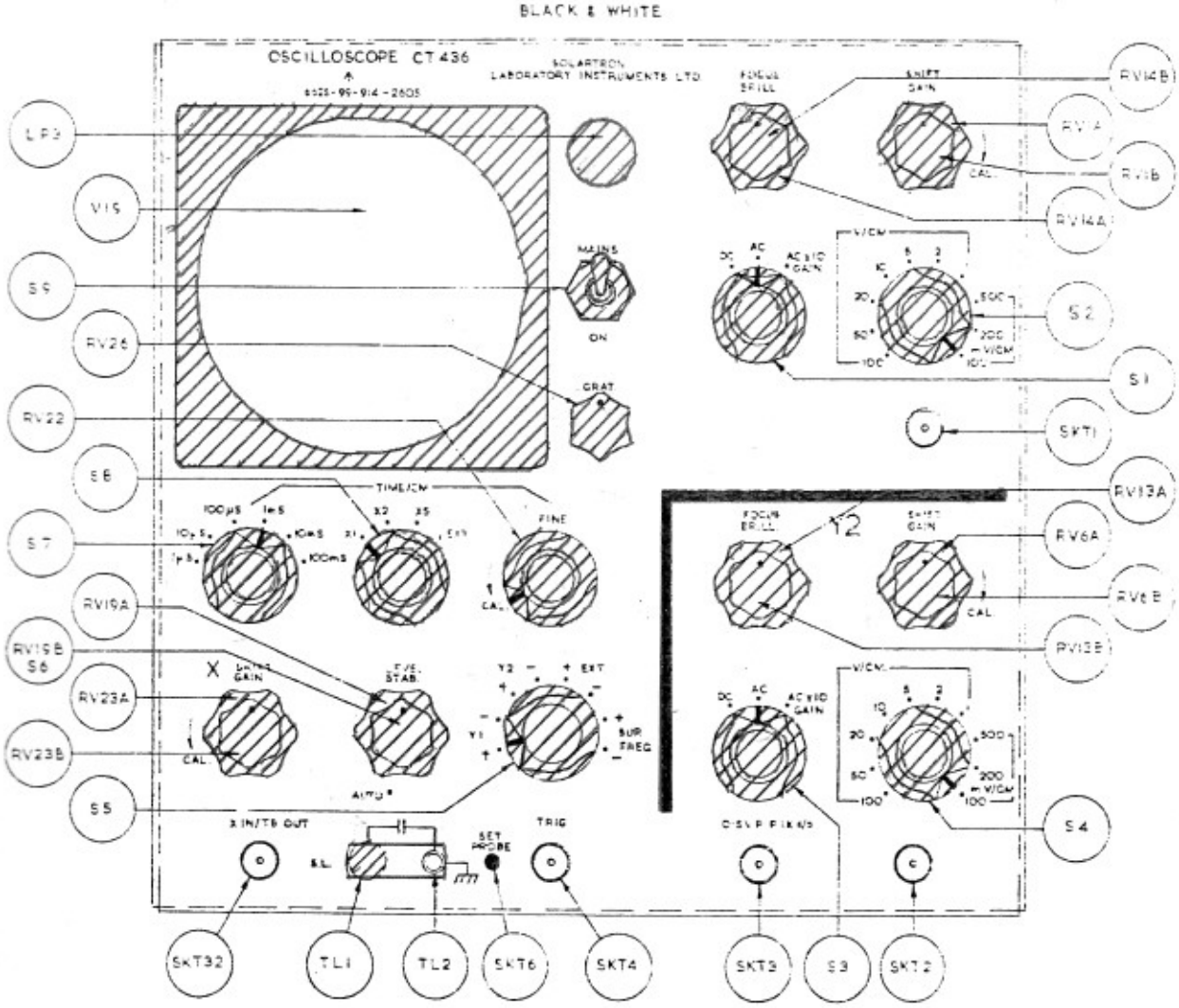

Fig. 1. The Oscilloscope Front Panel.

SECTION I

PERFORMANCE SPECIFICATION

GENERAL

The CT 436 oscilloscope is a portable general purpose instrument suitable for many applications, which has been designed for inter-service use to meet specification K114E Issue 2. The double gun cathode ray tube is controlled by twin brilliance and focus controls. Two Y amplifiers are provided; the Y1 amplifier provides deflection voltages for the upper gun, and the Y2 amplifier provides deflection voltages for the lower gun. The controls for the two Y systems are grouped in two sections on the front panel separated by broad engraved lines.

Y AMPLIFIERS

There are two similar Y amplifiers.

Bandwidth

'DC'	:	DC - 6 Mc/s (-3dB)
'AC'	:	2.5 c/s - 6 Mc/s (-3dB)
'AC x 10'	:	3 c/s - 500 kc/s (-3dB) Note: These bandwidths are measured with the fine gain control in the Cal. position.
Rise Time	:	60 mμsec (approx)
Overshoot and Ringing	:	Less than 2%.
Sensitivity	:	100 mV/cm - 100 V/cm continuously variable.
Ranges 'DC & AC'	:	100 mV/cm; 200 mV/cm; 500 mV/cm; 1 V/cm; 2 V/cm; 5 V/cm; 10 V/cm; 20 V/cm; 50 V/cm; 100 V/cm.
'AC x 10'	:	The gain of the amplifier is increased x 10 on all the above ranges to give a sensitivity range from 10 mV/cm - 10 V/cm.
Fine Control	:	The gain control gives approximately 3 : 1 variation in gain on all range settings, thus any Y sensitivity may be obtained between 10 mV/cm and approx. 300 V/cm.

Input

Impedance	:	Constant on all ranges, 1 MΩ in parallel with approximately 30 pF.
Potential	:	The potential between the following points must not exceed 500 V. Signal Input : Chassis Signal Low : Chassis Signal Input : Signal Low

Coupling	:	With the input switch set to 'AC' & 'AC x 10' a 0.1 μF 600 V capacitor is inserted in series with the input.
Isolated	:	A signal low line enables signals isolated from chassis to be displayed.
Calibration Accuracy	:	± 5% (gain control set to Cal.)
Signal Delay	:	0.4 μsec, ± 2%.
Y Shift	:	Approximately two diameters of Y shift are provided on each range.
Y Plate Sensitivity	:	20 V/cm approximately. Connection may be made through capacitors on the access panel situated under a trap door in the top of the instrument case.

TIME BASE

Velocity	:	1 cm/μsec - 1 cm/sec continuously variable.
Ranges	:	1; 2; 5; 10; 20; 50 μsec/cm. 1; 2; 5; 10; 20; 50; 100; 200; 500 msec/cm. Obtained by a decade range switch and multiplier. A potentiometer with a Cal. position gives fine control of velocity.
Linearity	:	1% approximately (calculated)
Output	:	The time-base waveform is available at a socket on the front panel.
Amplitude	:	15 V pk-pk.
Loading	:	Must not exceed 1 mA pk-pk.
Impedance	:	150 Ω approximately.
Calibration Accuracy	:	± 5% at speeds ≥ 20 cm/sec. ±15% at speeds < 20 cm/sec.

TRIGGER

Modes	:	Repetitive, triggered or auto triggered.
Sources (+ve or -ve)	:	Y1, Y2, external, supply frequency.
Sensitivity		
Internal	:	3 mm pk-pk.
External	:	100 mV/ pk-pk.
Level	:	The time-base may be triggered from any point on the waveform, within a window centred on the mean level of the waveform.

Internal	:	± 2.5 cm.
External	:	750 mV.
Input Impedance	:	1 MΩ in parallel with approximately 30 pF.

'X' AMPLIFIER

Bandwidth	:	DC - 500 kc/s (-3dB)
Sensitivity	:	0.2 V/cm - 2 V/cm approximately (continuously variable).
Input Impedance	:	1 MΩ in parallel with approximately 30 pF.
'X' Shift	:	Either end of the trace may be centred at all settings of the 'X' gain control.
Output	:	The 'X' amplifier output is available at a socket on the access panel.
Waveform	:	150 V pk-pk. N.B. Limiting will be introduced on the waveform, when the expansion control is turned towards maximum gain due to the window effect of the amplifier.
Impedance	:	1 MΩ.

CALIBRATOR	:	A square-wave is available at the Cal. socket on the front panel.
Amplitude	:	0.5 V pk-pk, ± 1%.
Frequency	:	1000 c/s, ± 1%.
Auxiliary Output	:	7.5 V pk-pk approximately, for use when adjusting the compensation of passive probes.

DISPLAY

Cathode Ray Tube

Screen	:	3½" diameter flat face.
Fluorescence	:	Green, medium persistence (other phosphors available).
E.H.T.	:	1.75 kV approximately, stabilised.
Graticule	:	8 cm x 8 cm engraved in cm squares. Additional horizontal lines are added on the approximate electrical centres of the upper and lower guns. These latter lines and the vertical centre line are further sub-divided into 2mm sections. Adjustable illumination is provided.
Camera Attachment	:	The c.r.t. escutcheon may be fitted with an adaptor to take a camera.

GENERAL

Alternative Power Supplies	(a)	:	A power supply J.S. Cat. No. 6625-99-914-5027 for use on AC supply mains.
	(b)	:	A Convertor Direct Current J.S. Cat. No. 6625-99-945-0507 for use on DC supplies.
Dimensions		:	10" high x 10" wide x 16" long. The overall length is increased to 19" when the DC/AC converter is fitted.
Weight		:	28 lb. with the power supply fitted. 32 lb. with DC/AC converter fitted.
Ventilation		:	The oscilloscope is ventilated by convection currents and free air circulation around the instrument is desirable.
Instrument Stand		:	An adjustable stand is fitted to the underside of the case to tilt the instrument to a convenient viewing angle.
Sockets		:	BNC and 50S/155.
Power Input		:	When operating from an AC supply alternative power plugs are provided at the side and rear of the instrument.

ACCESSORIES

1) Power Supply.	:	J.S. Cat. No. 6625-99-914-5027
AC Input	:	100 - 125 V in 5 V steps. or 200 - 250 V in 10 V steps. 45 - 400 c/s, 100 VA.
2) Convertor Direct Current	:	J.S. Cat. No. 6625-99-945-0507
DC Input	:	24 - 30 volts. 125 watts DC.
Regulation	:	The AC output does not vary more than ± 7% when the DC input is varied ± 3 V about 27 V.
3) Cable Assembly Power Electrical	:	J.S. Cat. No. 6625-99-100-970.
Length	:	9 ft.
Terminations	:	Plessey Mk. IV, 3 pin right angle socket to unterminated wires.
4) Cable Assembly Power Electrical	:	J.S. Cat. No. 6625-99-945-0504
Length	:	9 ft.
Terminations	:	Plessey Mk IV, 2 pin right angle socket to unterminated wires.
5) Cable Assembly Radio Frequency	:	J.S. Cat. No. 6625-99-914-2604.

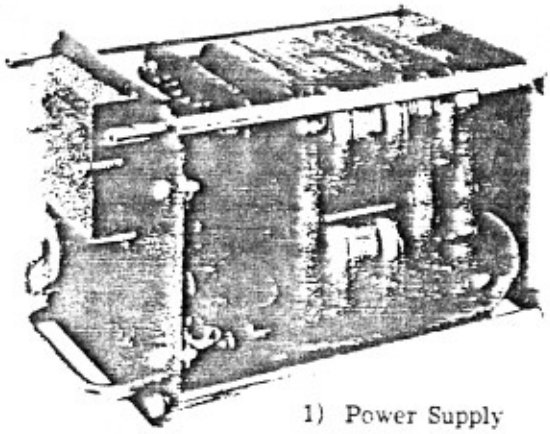

1) Power Supply

11) Case Cable Assembly

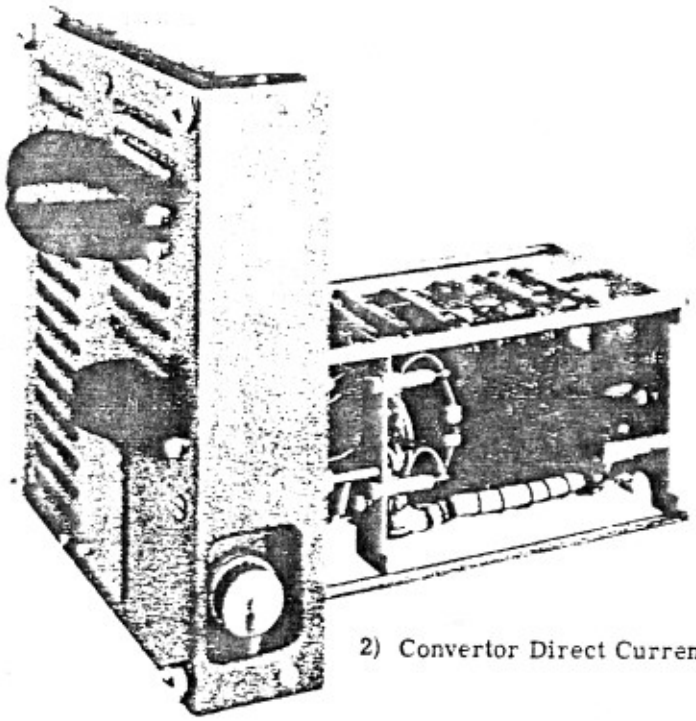

2) Convertor Direct Current

10) Adaptor Electrical Plug to Terminal

7) Lead Electrical

5) Cable Assembly Radio Frequency

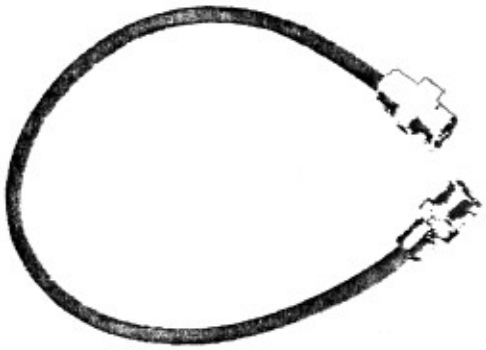

6) Cable Assembly Radio Frequency

Plate 1 Accessories

Length	:	36".
Cable	:	Coax type UR70 J.S. Cat. No. 6145-99-910-0298.
Termination	:	BNC Plug J.S. Cat. No. 5935-99-940-1089 and Crocodile clips.
6) Cable Assembly Radio Frequency	:	J.S. Cat. No. 6625-99-914-2603.
Length	:	13".
Cable	:	Coax type UR70 J.S. Cat. No. 6145-99-910-0298.
Terminations	:	BNC Plug type J.S. Cat. No. 5935-99-940-1089 at both ends.
7) Lead Electrical	:	J.S. Cat. No. 6625-99-914-2602.
Length	:	36".
Cable	:	14/.0076; .012 wall, grey J.S. Cat. No. 6145-99-910-0184.
Terminations	:	Plug free J.S. Cat. No. 5935-99-932-5985 to Crocodile clip 5940-99-940-3456.
8) Visor C.R.T.	:	J.S. Cat. No. 5999-99-914-2601.
9) Filter Light C.R.T.	:	J.S. Cat. No. 6625-99-914-2600.
10) Adaptor Electrical Plug to Terminal	:	J.S. Cat. No. 6625-99-914-2815.
11) Case Cable Assembly	:	J.S. Cat. No. 6625-99-914-2599.
12) Cover Test Set Case CT 436	:	J.S. Cat. No. 6625-99-914-2606.
13) Cover Test Set Case CT 436A	:	J.S. Cat. No. 6625-99-945-0505
14) Probe Electronic Test	:	J.S. Cat. No. 6625-99-945-0506
Input Impedance	:	10 MΩ in parallel with approximately 10 pF.
Attenuation	:	20 dB.
Compensation	:	Adjustable.
15) Hood Fluroscopic Screen	:	J.S. Cat. No. 6625-99-945-0508

STANDARD PACKS

- The oscilloscope and its accessories may be bought independently or in the standard packs listed below.

1) The oscilloscope CT 436 J.S. Cat. No. 6625-99-914-2605.

1 Oscilloscope unit
1 Power Supply

DG/

2) The Oscilloscope CT 436 Set J.S. Cat. No. 6625-99-913-8618.

1	Oscilloscope CT 436 J.S. Cat. No. 6625-99-914-2605
1	Cable assembly power electrical J.S. Cat. No. 6625-99-100-970
3	Cable assembly radio frequency J.S. Cat. No. 6625-99-914-2604
1	Cable assembly radio frequency J.S. Cat. No. 6625-99-914-2603
4	Lead electrical J.S. Cat. No. 6625-99-914-2602
1	Visor c.r.t. J.S. Cat. No. 5999-99-914-2601
1	Filter light c.r.t. J.S. Cat. No. 6625-99-914-2600
2	Adaptor electrical plug to terminal J.S. Cat. No. 6625-99-914-2815
1	Case cable assembly J.S. Cat. No. 6625-99-914-2599
1	Cover test set case J.S. Cat. No. 6625-99-914-2606

3) The oscilloscope CT 436A J.S. Cat. No. 6625-99-945-0502

1	Oscilloscope unit
1	Convertor Direct Current

4) The Oscilloscope CT 436A Set J.S. Cat. No. 6625-99-945-0503

1	Oscilloscope CT 436A J.S. Cat. No. 6625-99-945-0502
1	Cable assembly power electrical J.S. Cat. No. 6625-99-945-0504
3	Cable assembly radio frequency J.S. Cat. No. 6625-99-914-2604
1	Signal lead J.S. Cat. No. 6625-99-914-2603
4	Leads electrical J.S. Cat. No. 6625-99-914-2602
1	Visor c.r.t. J.S. Cat. No. 5999-99-914-2601
1	Filter light c.r.t. J.S. Cat. No. 6625-99-914-2600
2	Adaptor electrical plug to terminal J.S. Cat. No. 6625-99-914-2815
1	Case cable assembly J.S. Cat. No. 6625-99-914-2599
1	Cover test set case J.S. Cat. No. 6625-99-945-0505

SECTION II

OPERATING INSTRUCTIONS

FRONT PANEL CONTROLS

1. Y1 Amplifier

Brill (RV14A) A potentiometer which controls the brilliance of the Y1 trace.

Focus (RV14B) A potentiometer which controls focus of the Y1 trace.

Gain (RV1A) A variable resistor which gives approximately 3 : 1 variation of the gain of the Y1 amplifier to give continuous coverage between the calibrated positions of the V/cm switch.

Shift (RV1B) A potentiometer which gives control of vertical movement of the Y1 trace.

DC/AC/AC x 10 Gain (S1) A three position switch which selects DC or AC coupling of the input signal and provides a gain increase of ten times in the AC x 10 position.

V/cm (S2) A ten position wafer switch controlling the Y1 amplifier sensitivity in discrete steps between 100 mV/cm and 100 V/cm.

SKT1 A coaxial socket to which the Y1 input signal is connected.

2. The Y2 Amplifier

Brill (RV13A) A potentiometer which controls the brilliance of the Y2 trace.

Focus (RV13B) A potentiometer which controls focus of the Y2 trace.

Gain (RV6A) A variable resistor which gives approximately 3 : 1 variation of the gain of the Y2 amplifier to fill the gaps between the calibrated positions of the V/cm switch.

Shift (RV6B) A potentiometer which gives control of the vertical movement of the Y2 trace.

DC/AC/AC x 10 Gain (S3) A three position switch which selects DC or AC coupling of the input signal and provides a gain increase of ten times in the AC x 10 position.

V/cm (S4) A ten position wafer switch controlling the Y2 amplifier sensitivity in discrete steps between 100 mV/cm and 100 V/cm.

SKT2 A coaxial socket to which the Y2 input signal is connected.

SL (TL1) An insulated terminal, normally linked to the chassis terminal (TL2). It is used as the signal return path when examining isolated signals.

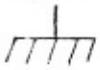

(TL2) A pillar terminal connected directly to chassis.

3. Time-Base

Time/cm (S7) A six position switch for selecting the time-base velocity in decade steps from 1 μsec/cm to 100 msec/cm.

Time/cm (S8) A four position switch providing intermediate calibrated velocity settings at x 1, x 2 and x 5, the range setting. The fourth position is used when an external horizontal deflection signal is being employed.

Time/cm Fine (RV22) A potentiometer which provides fine control of the time-base velocity to give continuous coverage between the calibrated positions.

4. X Amplifier

X Gain (RV23A) A variable resistor which varies the gain of the X amplifier to provide time-base expansion between x 1 and approximately x 10.

X Shift (RV23B) A potentiometer which controls the horizontal movement of the Y1 and Y2 traces.

X IN/TB Out (SKT32) A coaxial socket from which the time-base output may be taken or through which, when S8 is set to external, a signal may be fed into the X amplifier.

5. The Trigger Amplifier

Stab (RV19A) The stability control is a potentiometer which is adjusted for stable operation of the time-base. As the control is turned more clockwise, the time-base changes from a triggered mode to a free running mode.

Level (RV19B and S6) A potentiometer with a switch operating in the fully counter-clockwise (AUTO) position. The potentiometer varies the position on the triggering waveform from which the time-base triggers. In the AUTO position the time-base will automatically trigger from a wide range of input signals.

Y1/Y2/Ext./Sup. Freq. (S5) An eight position switch for selecting the source and polarity of the triggering signal.

Trig. (SKT4) A coaxial socket into which signals are fed to trigger the time-base from an external source.

6. The Calibrator

Set Probe (SKT6) A socket on the front panel from which a rectangular wave of 7.5 V pk-pk may be obtained for setting up probes.

0.5 V pk-pk 1 kc/s (SKT3) A socket on the front panel from which the calibrating waveform of 0.5 V pk-pk 1 kc/s can be taken for the purpose of calibrating Y amplifiers or the time-base.

7. Miscellaneous Items

Grat. (RV26) A variable resistor which controls the intensity of illumination of the graticule.

Mains (S9) A toggle switch controlling the power input to the instrument.

LP3 A signal lamp indicating when the mains supply to the instrument is switched on.

8. Main Supply Inputs

Mains (PL1 and S10) A 3 pin plug and double pole change over switch situated on the left-hand side of the instrument. The plug may be used to supply AC mains to the instrument and the switch is provided to select either this plug or the input plug on the transformer sub-unit.

Mains (PL2) A three pin plug situated on the rear of the transformer sub-unit. This plug is to connect AC mains to the instrument when it is preferred to supply the instrument from the rear rather than from the side.

PL1 A two pin plug on the DC/AC converter which is used to connect DC mains into the instrument when the DC/AC converter is being used.

9. The C.R.T. Access Panel

The c.r.t. access panel is situated on the top of the instrument and is accessible through a trap door in the lid.

Y1 Upper (SKT8) A socket through which external signals may be connected to the upper plate of Y1 gun of the cathode ray tube.

Y1 Lower (SKT7) A socket through which external signals may be connected to the Y1 lower plate.

Z Mod. (SKT13) A socket through which brilliance modulation signals may be fed to the grids of the cathode ray tube. When this input is not in use, the link joining SKT13 to SKT11 should be fitted.

X Out (SKT14) A socket from which the sweep waveform may be taken to drive swept oscillators and similar apparatus.

GENERAL

Due to the large number of combinations of the controls, it is advisable to follow the procedure given below when switching on the instrument, until familiarity makes it possible to by-pass a number of steps.

CONTROL SETTINGS

Note: There are six dual control positions on the front panel which have front and rear knobs, these are distinguished in the following table by the words FRONT and REAR.

Set all the controls as follows:-

BRILL (both)	fully counter-clockwise	rear
FOCUS (both)	mid-traverse	front
V/CM (both)	100 V	
GAIN (both)	fully clockwise (cal)	rear
'Y' SHIFT (both)	mid-traverse	front
INPUT SWITCH (both)	AC	
TIME/CM	1 msec	
TIME/CM	x 1	
TIME/CM (fine)	fully counter-clockwise (cal)	front
'X' SHIFT	mid-traverse	rear
'X' GAIN	fully counter-clockwise (cal)	
TRIG. SELECTOR	Y1 +	rear
STABILITY	fully clockwise	front
LEVEL	Auto	
GRAT.	as set	
MAINS	off	

POWER CONNECTIONS

1. AC Supply

When the oscilloscope is to be supplied from the AC supply main, check that the instrument is fitted with the transformer unit (Accessory No. 1). Adjust the mains voltage selector panel on the transformer unit to coincide with the supply voltage. Connect the mains lead to the mains input plug on the left-hand side of the oscilloscope or to the plug on the transformer unit. Set the switch adjacent to the mains plug on the side of the instrument to the correct position for the plug in use (i.e. toggle forwards for the adjacent plug and to the rear for the plug on the transformer unit). Check the rating of the fuse in the transformer unit which should be 2A for 200 - 250 V supplies and 5A for 100 - 125 V supplies. Connect the mains lead to the supply main following the convention, Red - Line, Black - Neutral, Green - Earth.

2. DC Supply

When the oscilloscope is to be supplied from a DC source, check that the instrument is fitted with the DC/AC convertor (Accessory No. 2). Connect the DC supply lead to the plug on the side of the convertor unit and check that the switch adjacent to the mains input plug on the side of the instrument is set for supplies from the rear. Check the rating of the fuse in the convertor unit which should be 7A. Connect the DC supply lead to the DC supply following the convention Red-Positive, Black - Negative. Either side of the supply may be earthed or a floating supply may be used.

If the incorrect unit is fitted, it may be readily removed by undoing the retaining screws and withdrawing it from the back of the oscilloscope. The required unit may then be plugged into place and fixed with the retaining screws. There are four retaining screws on the transformer unit clearly marked by white rings around the heads. The DC/AC convertor has three retaining screws accessible through holes in the back plate.

PRELIMINARY ADJUSTMENTS

Set the mains switch to ON and wait for about two minutes while the instrument warms up

then turn the two brilliance controls clockwise until two traces appear. Some adjustment of the Y shift controls may be needed to achieve this. Adjust the focus controls to obtain the best possible line definition. Further adjustment will depend on the signals to be studied.

INPUT SIGNAL CONNECTIONS

The input signal to each 'Y' amplifier is connected through a coaxial socket marked Y1 or Y2 at the right-hand side to the front panel. The screening of these sockets is connected directly to chassis. When it is desired to examine a small signal relative to a potential other than earth, e.g. an anode waveform relative to HT +ve, the signal low terminal, normally linked to the chassis terminal, may be used as signal earth. Both signal inputs and signal earth may have a potential difference to chassis not exceeding 500 V peak.

TIME-BASE TRIGGERING

To obtain a stationary picture of signals having a repetition frequency up to 500 kc/s, select the required triggering source with the TRIGGER switch, set LEVEL control to 'AUTO' position, turn stability control counter-clockwise until the time-base stops running and then turn slightly clockwise until a stable picture is obtained.

If it is desired to trigger from some other point on the triggering waveform or from higher frequency signals, rotate the 'LEVEL' control clockwise until the correct condition is obtained.

The time-base will 'free-run' with the 'STABILITY' control fully clockwise and synchronisation may be obtained by adjustment of the 'LEVEL' and 'FINE VELOCITY' controls. The 'STABILITY' control also acts as a repetition rate control in the free running condition and may be used to obtain synchronisation from H.F. signals up to 5 Mc/s.

SIGNAL AMPLITUDE MEASUREMENT

Signal amplitude is determined by measuring the picture height in cms. and multiplying this by the V/cm control settings with the GAIN control in the CAL position.

BEAM CROSSOVER LIMITATIONS

When the deflector plates of both electron guns are commoned to their final anodes, the spots will lie approximately 1.25 cms above and below the centre graticule line. In use, the upper (Y1) spot should not be deflected more than 2.5 cms below the centre graticule line and the lower (Y2) spot not more than 2.5 cms above the centre graticule line. A greater crossover may result in spot defocussing. For optimum performance at high frequencies the picture size should be limited to 2 cm centred on the appropriate electrical centre line.

TIME-BASE VELOCITY

The time-base velocity is varied by four controls, the TIME/CM switch, the TIME MULTIPLIERS (Coarse and fine) and the 'X' GAIN. The 'X'GAIN and FINE controls should be set to 'CAL'. The TIME/CM and TIME MULTIPLIER switches should then be adjusted to suitable positions after which the stability control is varied to obtain a stationary picture.

Time measurement is achieved by measuring on the face of the tube, the length of the wanted time interval in cms. This reading is then multiplied by the settings of the TIME/CM switch and the TIME MULTIPLIER.

'X' AMPLIFIER INPUT

A socket on the front panel designated 'X' IN/TB Out' is connected directly to the 'X Amplifier' input. When the Time/cm multiplier is set to x 1, x 2, or x 5, the time-base waveform is avail-

ole on this socket for external use. The socket should not be used to drive a low impedance, or istortion of the waveform may occur.

When the multiplier is set to 'EXT' the socket may be used to feed signals into the 'X' amplifier. The input is returned to the shift potentiometer through a 1 MΩ resistor, and signals should herefore be capacitance coupled, or fed from a high impedance, wherever possible.

THE CATHODE RAY TUBE CONNECTION PANEL

The connection panel shown in Fig. 2 is situated under a trap-door on the left side of the top of the case. The door may be opened by turning the two 'Dzus' fastners at the front one quarter turn counter-clockwise and lifting the door from the front.

The panel is provided so that signals may be connected to the cathode ray tube Y1 plates without passing through the oscilloscope amplifiers. The connections to the Y1 plates pass through the holes in column C and for normal operation, are connected to the corresponding points in column D.

When it is required to connect signals to the cathode ray tube, by-passing the oscilloscope amp er, the Y plate connectors are moved to the corresponding points in column B and the signals to be examined are connected to the relevant positions in column A. Using these connections, the input signals are AC coupled to the 'Y' plates and the oscilloscope shift controls remain operative.

Brilliance modulation signals may be connected to the grids of the cathode ray tube from this board. The modulation signal is connected to the point designated Z Mod. Note that the other end of the resistor engraved on the panel is not earthed and should not be connected to earth. The link across the resistor must be removed while Z Mod. signals are applied, and replaced when Z Mod. is not in use.

The point on the panel labelled 'X OUT' is connected through a 0.01 μFd capacitor and a 1 MΩ resistor to the X amplifier. It provides sweep waveforms at high impedance which may be used for driving external equipments.

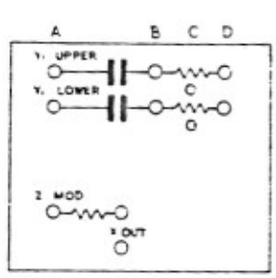

Fig. 2. The Access Panel.

SECTION III

PRINCIPLES OF OPERATION

GENERAL

This section provides an outline description of the function of each circuit and should be read in conjunction with the block diagrams. The instrument uses a double gun cathode ray tube to provide the two traces. Two identical amplifiers provide the signals to the two sets of vertical deflection plates while horizontal deflection is supplied to both sets of plates from a common time-base generator through the 'X' amplifier.

To obtain a stationary picture the time-base may be triggered by either the supply frequency, an external trigger signal or by either of the vertical deflection signals. The output from the time-base generator is fed through an 'X' amplifier to the X plates. A bright-up signal is also taken from the time-base generator through a bistable to the cathode of the cathode ray tube. This prevents any flare appearing at the commencement of the time-base when the spot rests. The power supplies for the instrument may be drawn from an AC supply main using the transformer unit or from a 24 - 30 volt DC supply using the DC/AC convertor. To permit simple calibration checks to be carried out in the field, a built-in calibrator unit is provided.

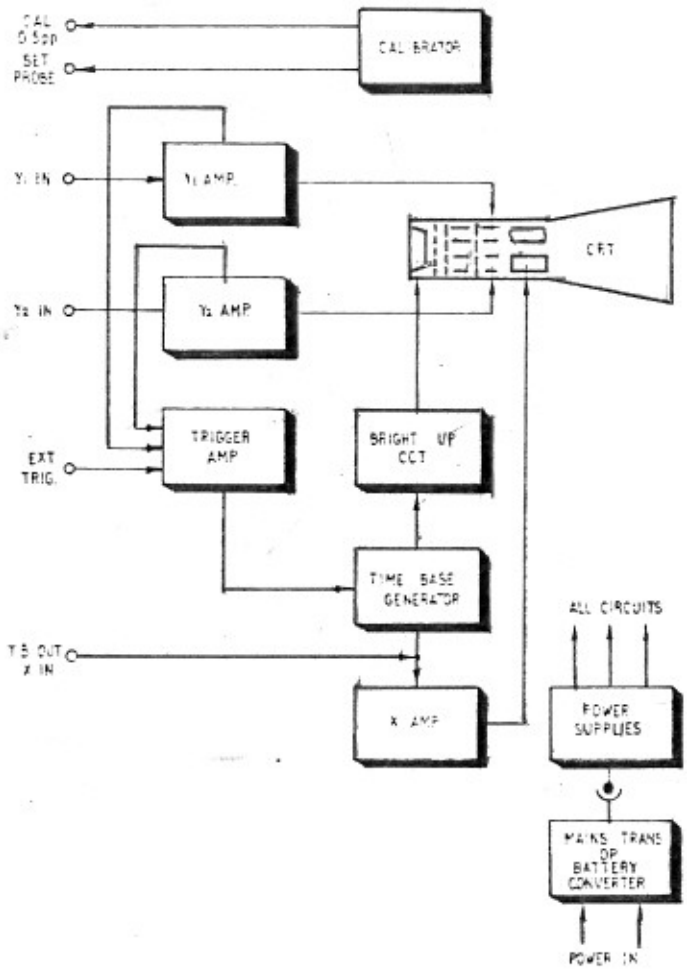

Fig. 3. Block Diagram of the Oscilloscope CT 436.

THE VERTICAL DEFLECTION AMPLIFIERS

The two vertical deflection amplifiers are identical and only one will be described. The block diagram Fig. 4, shows that each amplifier consists of an input attenuator, a first amplifier, a delay network, a second amplifier and an output amplifier. The V/cm control selects the setting of the input attenuator and the gain of the first amplifier. The input attenuator has three possible attenuations of 1, 0.1, and 0.01. The gain of the first amplifier is varied in ratio of 1; 2; 5 and 10. The combination of the attenuator and the first amplifier provides the ranges of the V/cm control. The minimum gain setting of the first amplifier is only used in the 100 V/cm position.

The gain of the first amplifier may also be varied by the gain control to provide intermediate gain settings between the various ranges.

The output from the first amplifier passes through a lumped constant delay network, which provides 400 mμsec delay, into the second amplifier.

The gain of this stage may be varied by changing the anode loads when the input switch is set to AC x 10. A balanced output is taken from the second amplifier to feed the output amplifier.

The output amplifier can also operate at two gains according to the setting of the input switch on the AC and DC positions, it is arranged to have the same gain to AC and DC signals. In the AC x 10 position, however, the DC coupling between the cathodes of the two valves is reduced whilst the AC coupling is increased. This gives the required AC gain while reducing DC drift signals from the input stage and maintaining constant the amount of shift available. Balanced output is taken from the output amplifier to feed the Y plates.

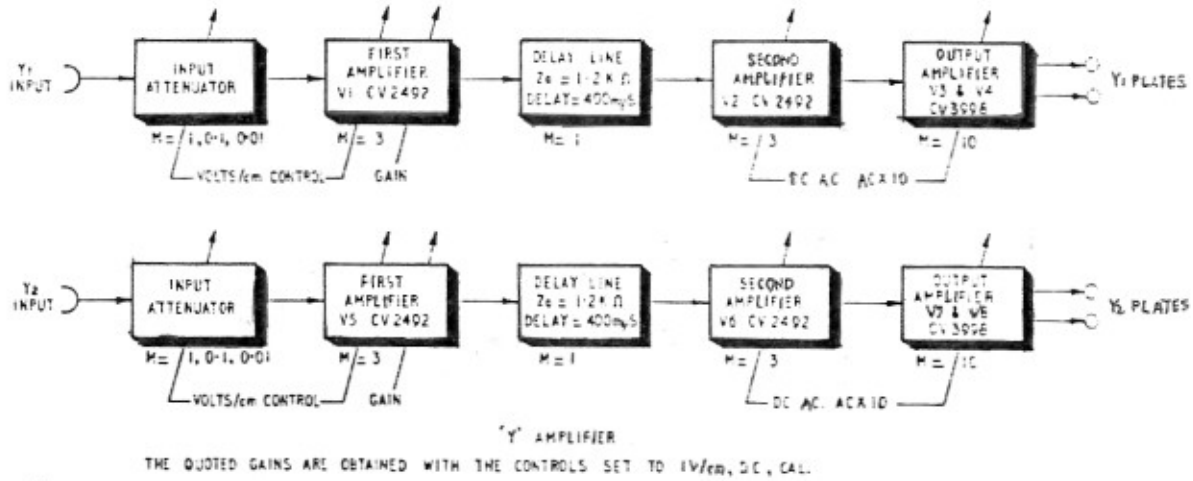

Fig. 4. Block Diagram of the Y Amplifiers.

THE CALIBRATING UNIT

The calibrating unit consists of a cathode coupled multivibrator circuit. A Zener diode is employed to limit the voltage swing on the output anode to ensure voltage accuracy and Grade I components are employed in the coupling circuits to ensure frequency stability.

THE HORIZONTAL DEFLECTION SYSTEM

The horizontal deflection system which is shown in the block diagram Fig. 5, consists of a trigger amplifier, a time-base generator, and 'X' amplifier. The trigger amplifier may receive signals from either of the two Y channels, or from an external socket or from the heater supply. The input switching is set according to the required signal polarity and feeds a balanced signal to the two grids of a cathode coupled differential amplifier.

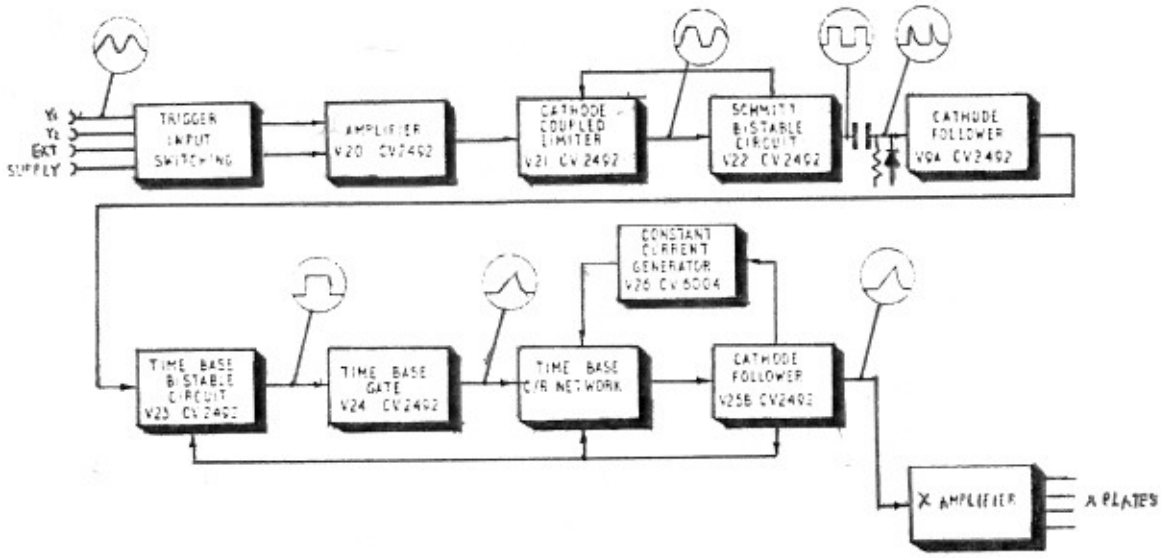

Fig. 5. Block Diagram of the X System.

A single ended output is taken to a cathode coupled limiter circuit, the DC conditions of which may be adjusted by the level control when working under normal triggering conditions. The output signal from the limiter feeds into the Schmitt bistable circuit which produces a rectangular output.

This is differentiated into a cathode follower to provide a pulse for triggering the time-base. The point on the input waveform which the Schmitt bistable operates, is adjusted by varying the DC levels on the limiter circuit with the level control. When the time-base is working on 'AUTO', the DC levels on the limiter are so adjusted that one half of V21, in conjunction with the Schmitt bistable V22, forms an astable circuit oscillating at approximately 30 c/s. Under these conditions the trigger amplifier is in its most sensitive state.

The differentiated pulse out of the cathode follower V9 is coupled into the anode of the time-base bistable circuit V23. This pulse causes the bistable to change state so that V24A conducts and V24B is cut off. The timing capacitor then charges through the constant current source producing a positive going ramp voltage which is fed directly into the grid of the cathode follower V25B. The rising time-base voltage is fed back to the bistable circuit and when the time-base reaches its upper limit the bistable returns to its other state, cuts off V24A causing V24B to conduct and discharge the timing capacitor. This gives the flyback stroke and the time-base rests in this condition until it is again triggered. A constant charging current is obtained by feeding the charging resistors from a neon stabilising tube connected to the cathode of the cathode follower. Thus as the timing capacitor charges, the voltage on the cathode of the cathode follower rises, and increases the charging voltage proportionately. The time-base output from the cathode follower is fed into the 'X' amplifier which consists of two pentodes connected as a cathode coupled differential amplifier. The coupling between the cathodes is through a variable resistor which provides control of X gain. Outputs are taken from the anodes of the 'X' amplifier valves to feed both sets of X plates.

BRIGHT-UP CIRCUITS

A differentiated signal is taken from the anode of the time-base bistable through a high voltage capacitor to feed the bistable circuit V18. The output from V18 is directly coupled to the cathodes of both guns of the cathode ray tube. These cathodes are held positive during the flyback and rest periods, cutting off the trace and are driven negative while the time-base is running to give a bright trace. The DC coupled bright-up obtained by this method ensures a brilliant trace without any flare or bright spot during the time-base rest period.

POWER SUPPLIES

The power supplies for the instrument are all drawn from one transformer, which may be either mains driven or may form a part of a DC/AC convertor. The positive HT supplies are drawn from two windings. A voltage doubling rectifier system produces DC voltage of 350 V, and a bridge rectifier system produces an additional 30 V supply, which is added to the 350 V supply to form a + 380 V line.

Two cathode followers, with their grids referred to a stable potential, draw current from the 380 V supply to produce two low impedance lines at 310 volts. A similar cathode follower draws current from the 350 V supply to produce an output at 185 volts. Current is drawn from the centre tap of the voltage doubling rectifier system through a series stabilising valve to generate a low impedance stabilised rail at 120 volts.

The grid voltage of the series stabilising valve is controlled by an amplifier which compares changes in the HT voltage with a stable reference voltage.

A voltage doubling rectifier operating on a further transformer winding produces a negative EHT supply of -1500 volts. This supply is returned to 0 V through a series control pentode which compares voltage variations in the EHT with the stabilised +120 V line, and with the unstabilised 360 V line. This gives partial stabilisation of the EHT supply with respect to 0 V, but complete stabilisation of the overall EHT potential. The output from a further winding of the transformer is half-wave rectified and produces a supply of 140 V, the positive side of which is connected to -1500 V giving a total negative voltage of 1640 volts.

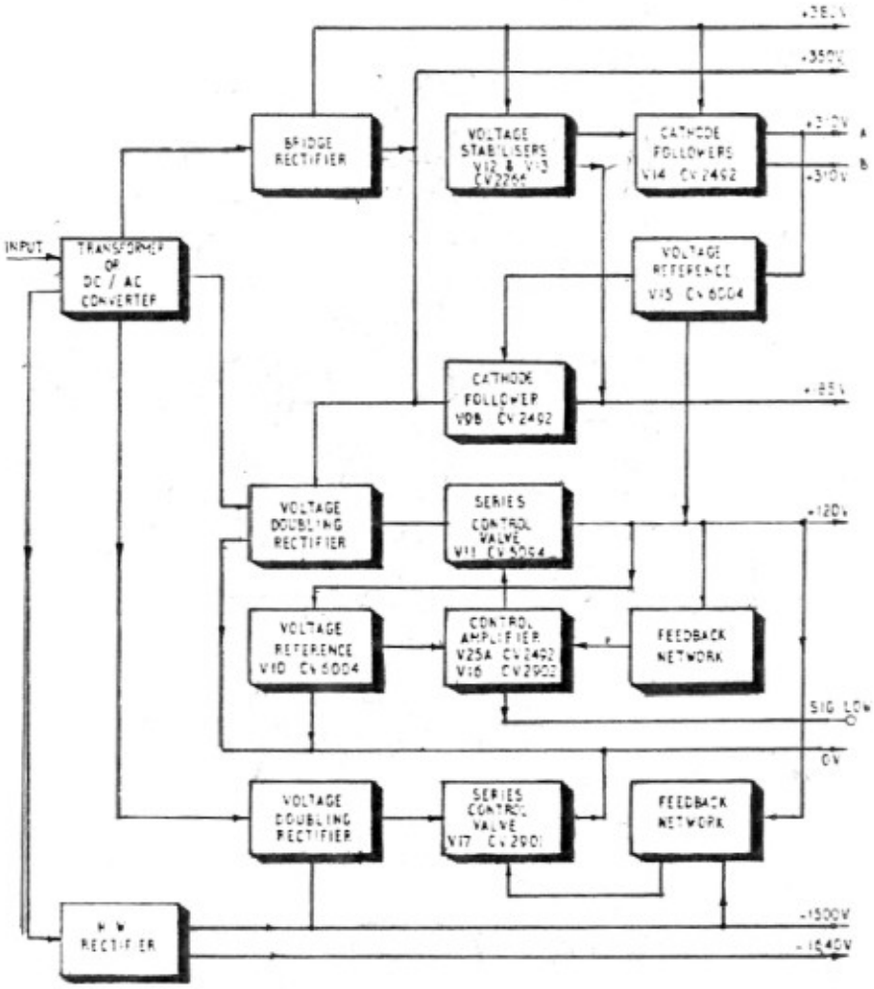

Fig. 6. Block Diagram of the Power Supplies.

SECTION IV

CIRCUIT DESCRIPTION

THE VERTICAL DEFLECTION SYSTEM

Since the Y1 and Y2 amplifiers are identical, only the Y1 amplifier will be described.

THE INPUT ATTENUATOR AND FIRST AMPLIFIER (See Fig. 7.)

Signal is connected into the oscilloscope through the Y input socket SKT1 and passes through R217 onto the input switch S1/1. This switch selects DC coupling by shorting out the coupling capacitor C1, AC coupling by removing the short circuit, and AC x 10 by varying the gain of the second and output amplifiers.

The signal then passes into the input attenuator which has three possible transmissions. On the 100 mV/cm, 200 mV/cm and 500 mV/cm ranges, the signal passes through without any attenuation, the DC path to earth being provided by the 1 MΩ resistor R5. C6 is provided to adjust the input capacity so that it may be constant on all attenuation ranges.

On the 1 V/cm, 2 V/cm, and 5 V/cm ranges, a transmission of 0.1 is provided by the resistive attenuator R3 and R4. This attenuator is compensated by C4B and C5 to equalise the transmission at low and high frequencies. On the 10 V/cm, 20 V/cm, 50 V/cm and 100 V/cm ranges, the attenuator gives a transmission of 0.01. This attenuator consists of R1 and R2, capacity compensated by C2B and C3. The switch wafers, S2/1F and S2/2R, earth sections of the attenuator not being used. The signal passes from the attenuator into the grid of V1A, one half of a double triode, which is connected as a cathode coupled differential amplifier with variable gain.

An output is taken from the anode of V1A to provide trigger signals, and output is taken from the anode of V1B through the delay network into the second amplifier. Positive feedback from the anode of V1B to the grid of V1A through C7 is provided to compensate for the 'Miller' input capacity of V1A. The gain of the amplifier is varied by the V/cm switch, four possible gains being provided.

Gain variation is obtained by altering the coupling between the cathodes of the two halves of the valve. On the 100 V/cm range, the minimum coupling exists, selected by S2/3R. The three other gain positions are selected by S2/3F, and provide the 1-2-5 positions on the V/cm switch on each decade of attenuation. RV2 is a pre-set control for adjusting the gain of the 2 and 5 positions, and RV1 is a fine gain control to give intermediate gain setting between the calibrated ranges. As RV1A is not capacity compensated, the quoted bandwidth for the instrument is only achieved when this control is set in the 'Cal' position, that is, at maximum gain.

The potential of the grid of the second half of the differential amplifier is adjusted by the potentiometer RV3 to balance the amplifier, and ensure that there is no displacement of the trace as different ranges are selected.

THE DELAY NETWORK

A signal delay of 400 mμsec ± 2% is provided by a four terminal network of inductance and capacitance. The inductors and capacitors are connected in 14 successive 'T' sections with matching elements at both ends and a terminating resistor at the output end. The line has a characteristic impedance of 1,200 ohms and a rise time of 45 mμsec. The pulse distortion introduced when the line is correctly adjusted does not exceed the following.

Preshoot 2%, Overshoot 1%, Ripple 1%.

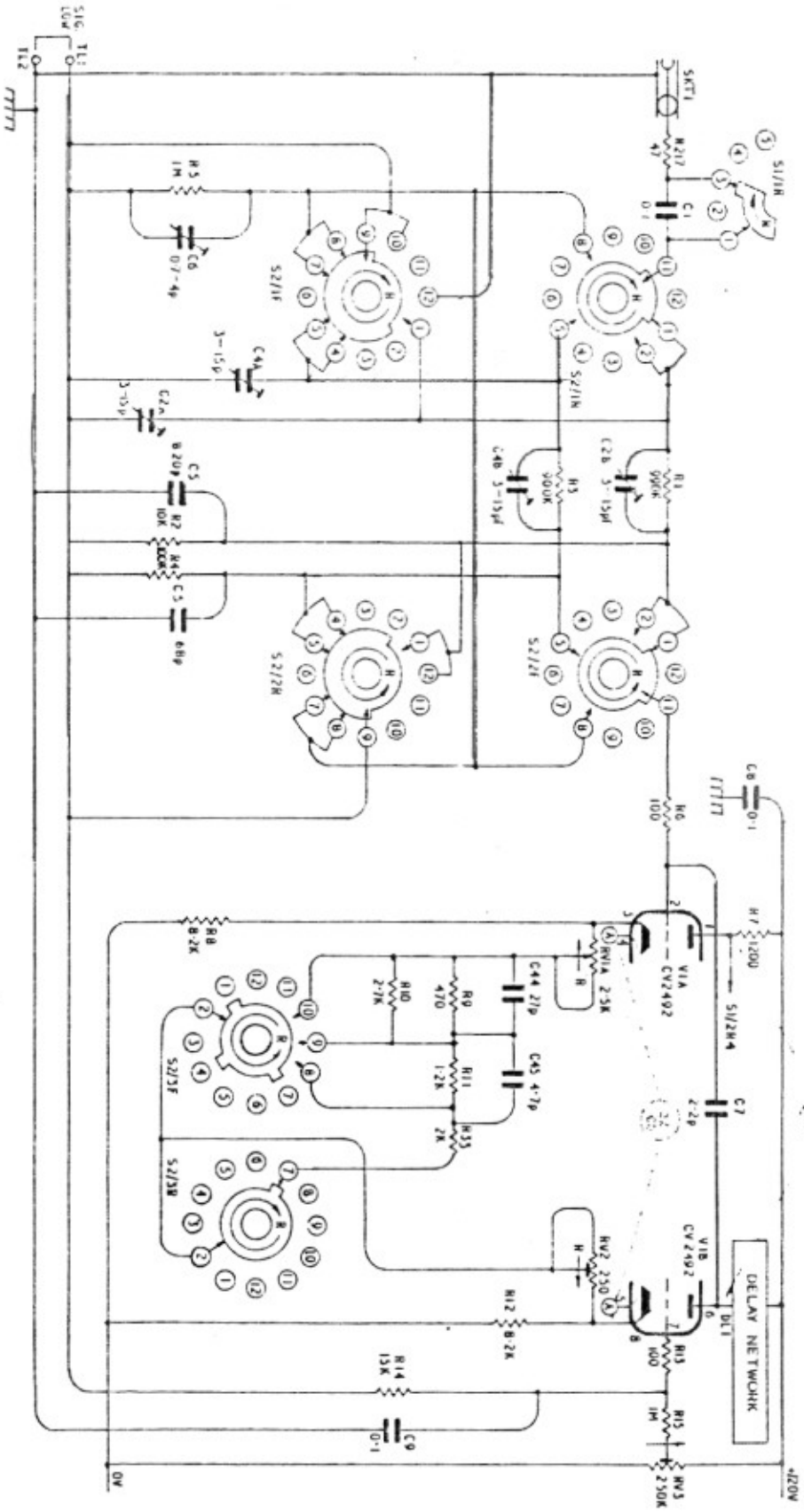

Fig. 7. The Input Attenuator and First Amplifier.

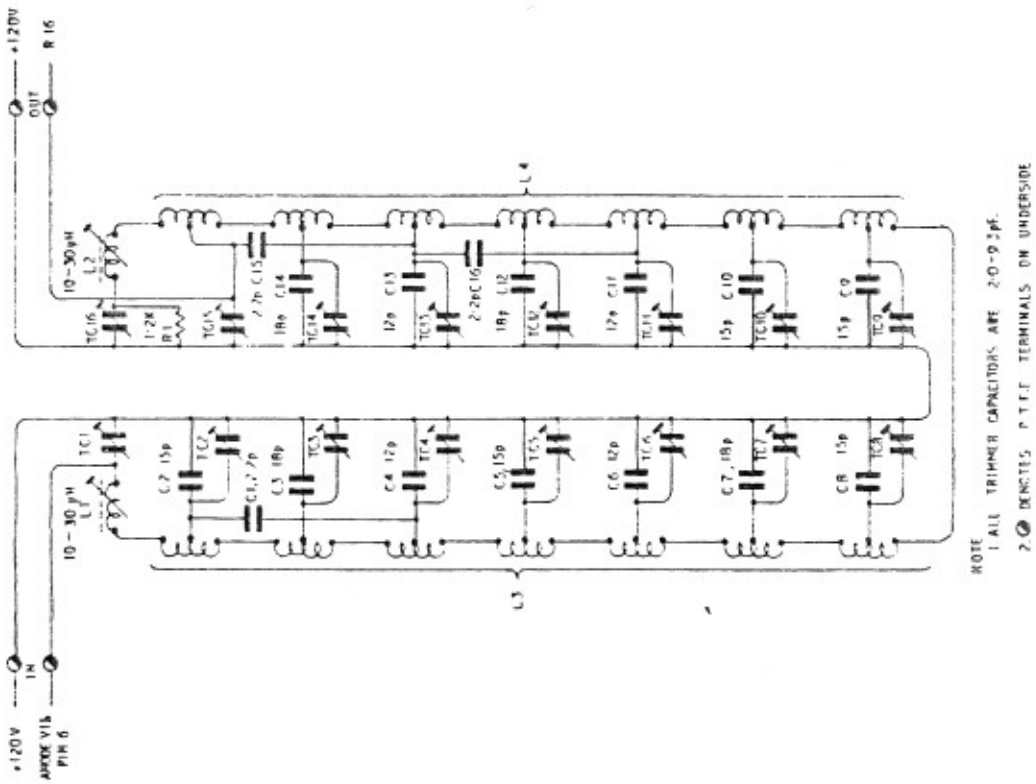

Fig. 8. The Delay Line.

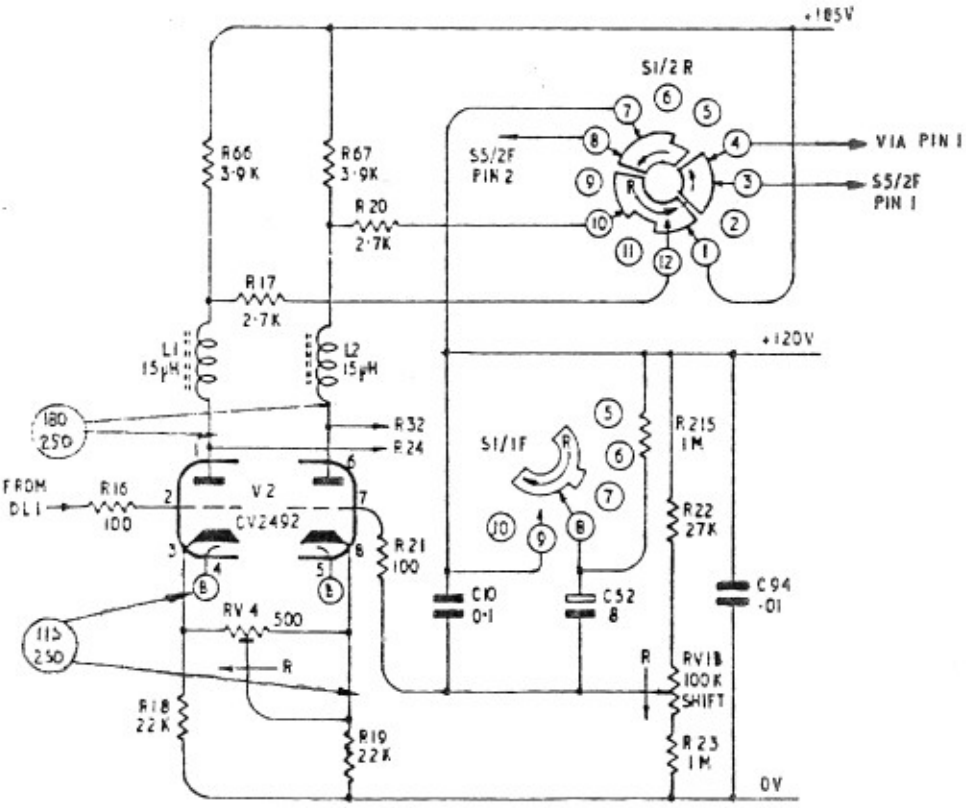

Fig. 9. The Second Amplifier.

THE SECOND AMPLIFIER

The second amplifier consists of the two halves of a double triode connected as a cathode coupled differential amplifier. The coupling between the cathodes may be adjusted by the variable resistance RV4 to preset accurately the gain of the amplifier on the 1 V setting. The anode load of each triode consists of two resistors in parallel, shunt peaked by an inductor to obtain optimum pulse response. One resistor in each anode is connected to +185 V through S1/2R. In the AC x 10 condition, these two resistors are disconnected from the HT line so that the anode load is increased, doubling the gain of this amplifier. At the same time, balanced trigger signals are taken from the two anodes of the amplifier through the resistors R17 and R20 to feed the trigger amplifier.

The signal input is from the delay network to pin 2. The DC level of the free grid, pin 7, is varied by RV1B to provide vertical shift signals. This grid is decoupled by C10 on the AC and DC ranges, and on the AC x 10 range a longer time constant is provided by switching in C52. This time constant introduces delay to the shift circuit to counteract the effect of high AC gain in the ensuing stage. A balanced output is taken from the anodes of the second amplifier to feed the output amplifier.

THE OUTPUT AMPLIFIER.

The output amplifier consists of two pentodes type CV 3998, connected as a cathode coupled differential amplifier. These pentodes receive a balanced signal on the grids from the second amplifier. The valves have separate cathode resistors, normal coupling being through R29. In the AC x 10 condition, however, the DC coupling is reduced by connecting R103 in series with R29. This reduces the DC gain of the output amplifier to minimise the effects of input drift and to retain constant shift sensitivity. At the same time, the AC gain of the output amplifier is increased by connecting C15 in series with RV5 between the cathodes. This increases the AC gain of the output amplifier approximately five times. A balanced output is taken from the anodes of the output valves to feed the Y1 plates of the cathode ray tube upper gun. Provision is made for external signals to be connected through 0.01 μFd. capacitors to the Y1 plates by moving two leads. The internal shift facility is retained when these connections are used.

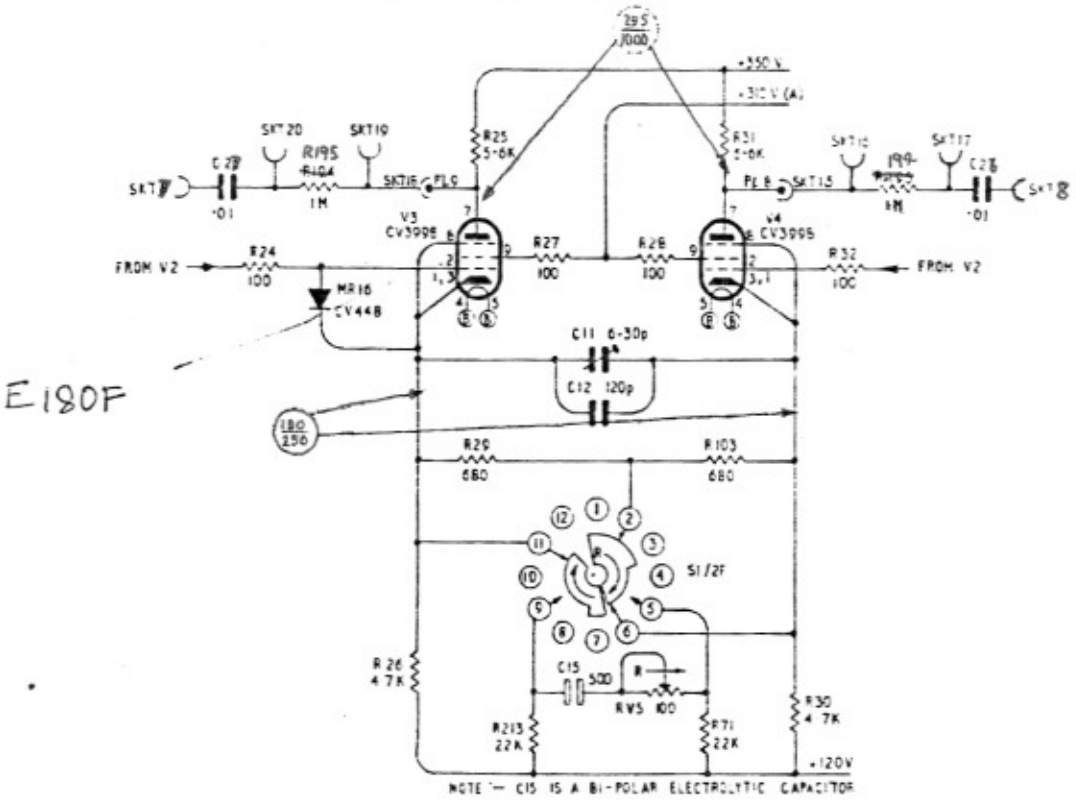

Fig. 10. The 'Y1' Output Amplifier.

THE HORIZONTAL DEFLECTION CIRCUITS

The Trigger Amplifier

Input signals to the trigger amplifier may be drawn from the external socket SKT4; from the Y1 amplifier; from the Y2 amplifier, or from the heater supply at a supply frequency. These input signals are fed to the trigger selector switch S5. The wipers of these two switch wafers are connected directly to the grids of the first trigger amplifier, V20. The switch is so arranged that when the correct polarity is selected, a constant polarity signal will always appear on the anode Pin 1 of V20.

V20 is connected as a cathode coupled differential amplifier. Neutralisation of 'Miller' capacitance is obtained by cross coupling from the opposite anodes through C70 and C71. The output signal is taken from the anode Pin 1 through C74 into the second amplifier.

The Limiter and Schmitt Bistable

This consists of a double triode connected as a cathode coupled limiter. The DC level of the input grid of V21 is preset by RV18 connected in series with the resistor chain R117 and R118. The grid (Pin 2) of the limiter is decoupled by C76 to the zero volt line, and the DC level of this grid in the normal trigger condition is adjusted by the 'level' control RV19B. Adjustment of this control varies the section of the waveform which passes through the limiter and therefore the point on the waveform from which the time-base is triggered. To maintain the gain of the circuit at high frequencies the anode load R122 is shunt peaked by L6. The output from the limiter is directly coupled into the following stage. This consists of the two halves of the double triode V22 connected as a cathode coupled bistable. The object of the bistable circuit is to provide a pulse of constant amplitude and rise time to trigger the time-base, regardless of the shape of the triggering waveform.

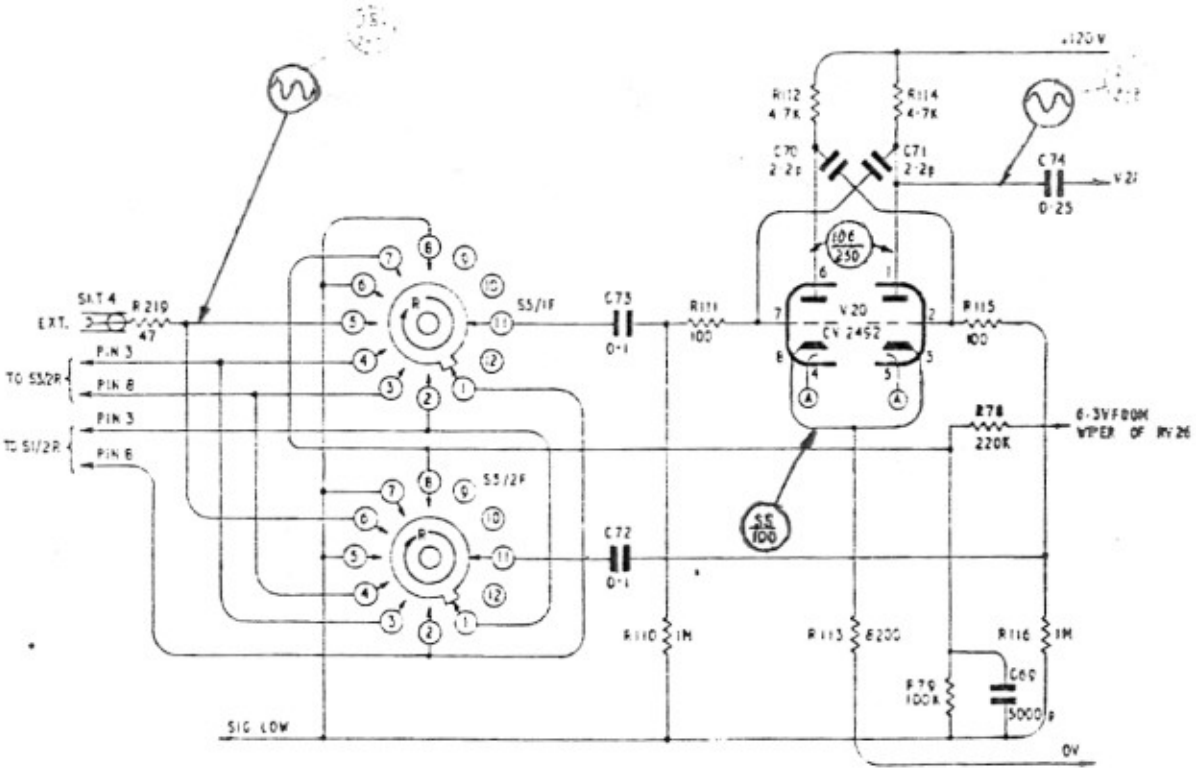

Fig. 11. The Trigger Amplifier.

A DC feedback voltage is taken from the anode Pin 1 of V22B through R125 onto the grid Pin 2 of V21. Normally this feedback is negligible due to the low impedance of the 'level' components. When switch 6 is set in the AUTO condition the 'level' control is disconnected, one half of V21 works in conjunction with V22 to operate as an astable circuit oscillating at a frequency of approximately 30 c/s. This circuit operates as follows:-

Assume that V22B is cut off, so that its anode rises to HT. This rise in voltage is coupled through R125 onto the grid of V21B. The rise in voltage on this grid is slowed while C76 is charged. However, when the grid reaches a potential at which V21B will conduct, its anode voltage will fall, cutting off V22A. This then causes the bistable circuit V22 to change stage, V22B conducts and its anode voltage falls. C76 then discharges through R124 and R125 until V21B is again cut off.

The rectangular output from V22B is differentiated in C79 and R211 to form a pulsed input into the cathode follower V9A. The diode MR15 conducts during the negative edge so that only the positive pulse resulting from the differentiation is passed to the cathode follower. The output from the cathode follower is directly coupled into the anode of V23B.

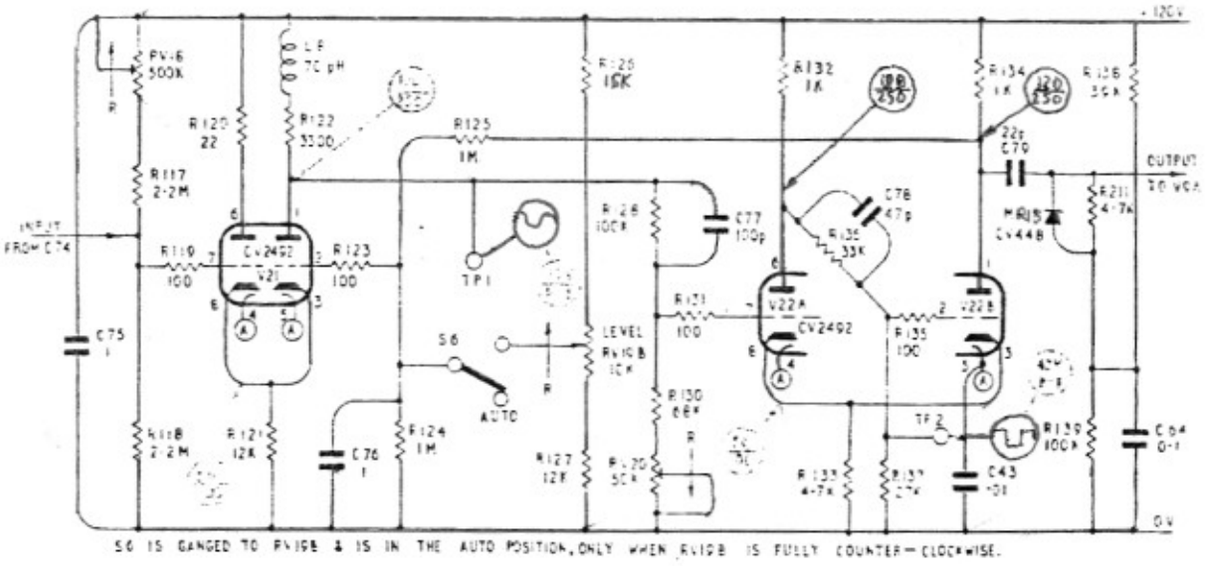

Fig. 12. The Cathode Coupled Limiter and Schmitt Trigger.

The Time-Base Circuit

The time-base generator consists of the bistable V23, the gating valve V24, the cathode follower V25B, and the neon voltage stabilising tube V26. Under normal conditions of operation the time-base is triggered and rests between triggering signals. Consider first the time-base in the resting condition awaiting a triggering signal. V23A is cut off and V23B is conducting. This applies a negative DC signal to the grid of V24A, cutting it off. V24B is therefore conducting, holding the timing capacitor selected by S7/1F, fully discharged. When a positive trigger pulse arrives at the grid of V9A, its cathode will rise, causing a rise in voltage on the anode of V23B. This rise in voltage will cause the bistable to change state so that a positive signal is coupled through MR10 and R154 to the grid of V24A. V24A then conducts, cutting off V24B, and the timing capacitor selected by S7/1F commences to charge through one of the charging resistors. The charging voltage is the potential existing across V26 and this is applied through some part of RV22 and through R164 in the x 1 condition; R164 and R163 in series in the x 2 condition; or through R162 in the x 5 condition.

As the timing capacitor charges, the rising voltage across it is directly coupled into the grid of the cathode follower V25B. The cathode of V25B follows the rise of grid voltage, taking with it, the cathode of V26. Since V26 is a voltage stabilising tube, the voltage across the charging resistor remains constant, resulting in a constant charging current and a linear time-base. The rising voltage on the cathode of V25B is coupled through R210 and MR13 to the grid of V23B, and when it crosses the grid base of V23B, the bistable V23 changes state, and a negative going voltage on the anode of V23B cuts off V24A and causes V24B to conduct. This discharges the timing capacitor to give the flyback stroke and the time-base then returns to its resting state.

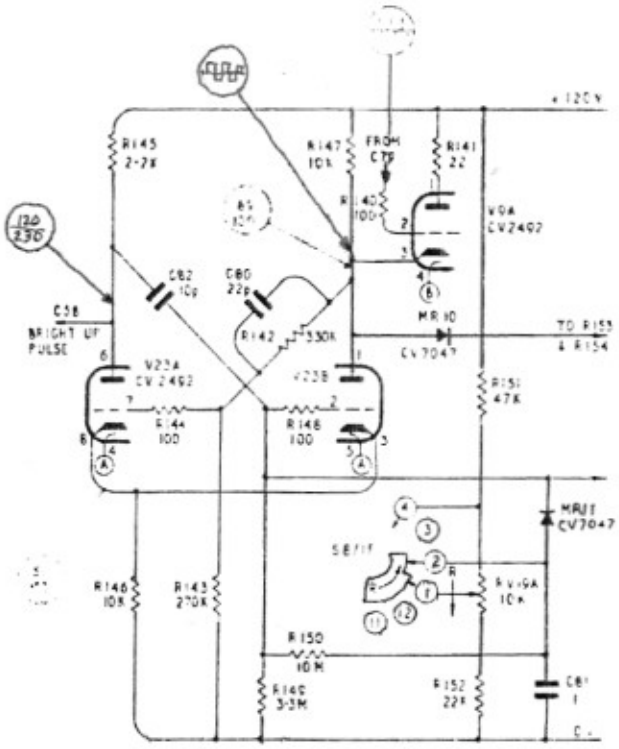

Fig. 13. The Time-Base Bistable.

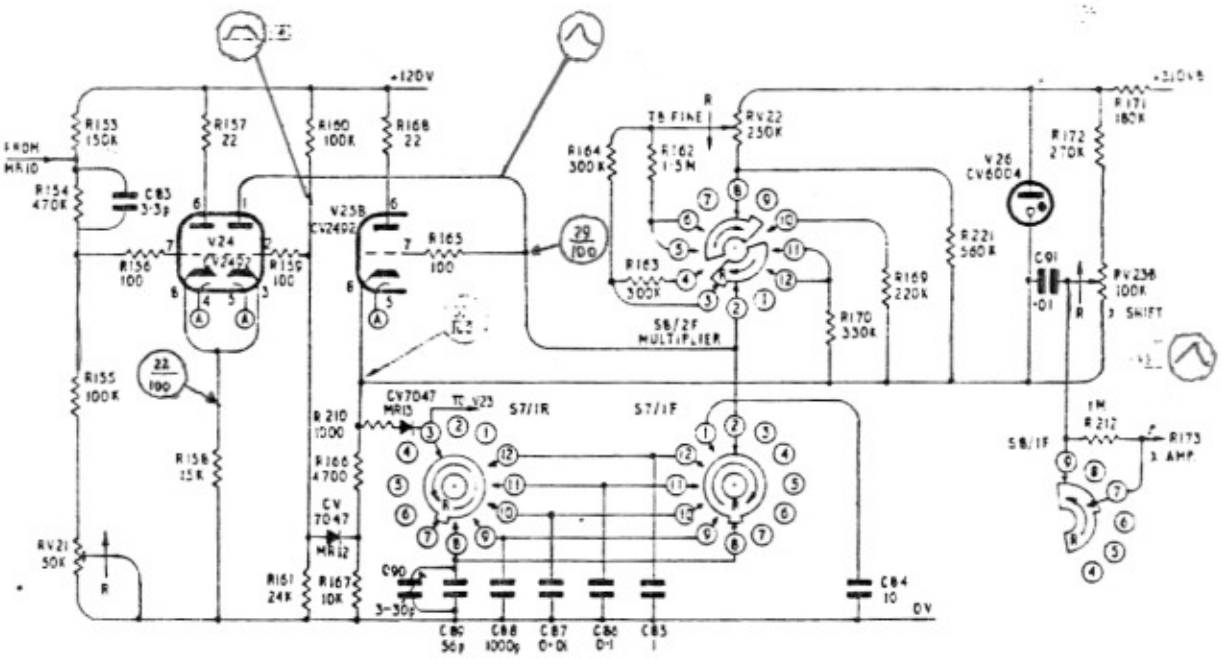

Fig. 14. The Time-Base Generator.

The potential to which the timing capacitors discharge is limited by the action of MR12, as the junction of R166 and R167 moves more negatively during the flyback stroke, it arrives at a potential at which MR12 will commence to conduct. This will then create a DC feedback loop around V24B and V25B, which holds the potential across the timing capacitors at a stable voltage. This action slows down the latter part of the flyback stroke and provision has to be made to ensure that the time-base cannot be triggered again before the flyback stroke is complete.

S7/1R selects a timing capacitor which is charged as the cathode of V25B moves positive at the end of the sweep. This capacitor then discharges through R149 and R150, and V23 cannot be triggered again until the discharge is complete. The potential to which this hold-off capacitor is discharged is limited by the germanium diode MR11. This diode is returned to the stability control RV19A, and as RV19A is turned clockwise, R11 is returned to an increasingly more negative potential which is eventually sufficiently negative to cut off V23B. The time-base then free runs and the remaining section of the stability control acts as a time-base repetition frequency control. Time-base output is taken from the cathode of V25B through C91 to the *X* amplifier. The DC level of the input into the *X* amplifier is controlled by RV23B connected across V26. This provides the *X* shift control.

The *X* Amplifier

The X amplifier consists of two pentodes, V27 and V28, connected as a cathode coupled differential amplifier. Separate cathode loads are used and cathode coupling is through the variable resistor RV23A. This provides approximately 10 to 1 variation in gain of the X amplifier to give X gain control. As the cathode ray tube of the instrument is a double gun tube, the duplicate X plates may not have identical sensitivities. In order to correct for this and ensure perfect time registration, one set of X plates is connected to the amplifier through the potentiometers RV24 and RV25, the other set being connected directly to the anodes of V27 and V28. The method of connection depends on the relative sensitivities of the two sets of plates and is finally determined on test. If the cathode ray tube is changed it may be necessary to change these connections. An output may be taken from the anode of V28 through R181 and C93 to provide a 150 V pk-pk sweep voltage at high impedance, which may be used to drive swept oscillators etc.

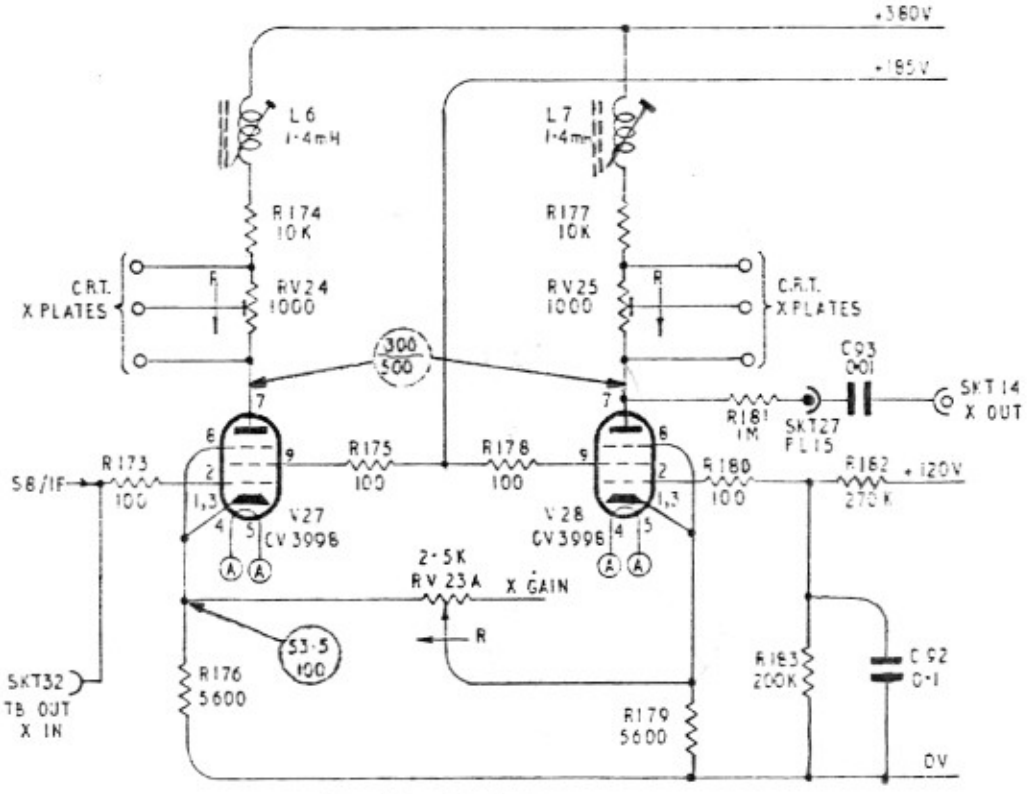

Fig. 15. The 'X' Amplifier.

THE CALIBRATING UNIT

The calibrating unit consists of the two halves of a double triode V29 connected as a cathode coupled multivibrator circuit oscillating at a frequency of 1000 c/s. Frequency stability is assured by using high stability timing components and RV16 in the anode of V29B is provided to set accurately the frequency of oscillation. The amplitude of the voltage appearing on the anode of V29A is limited by the Zener diode MR14. This constrains the anode voltage to move from +120 V when the valve is cut off, to approximately +112.5 V when the valve is conducting. An output is taken from the anode through C39 to a socket on the front panel labelled 'Set Probe'. This gives a stable output voltage at a nominal 7.5 V depending on the actual breakdown voltage of the Zener diode. The anode load of V29A is in three sections, so that an accurate $\frac{1}{2}$ V signal may be tapped off. The output voltage is adjusted to be exactly $\frac{1}{2}$ V pk-pk by the preset potentiometer RV15.

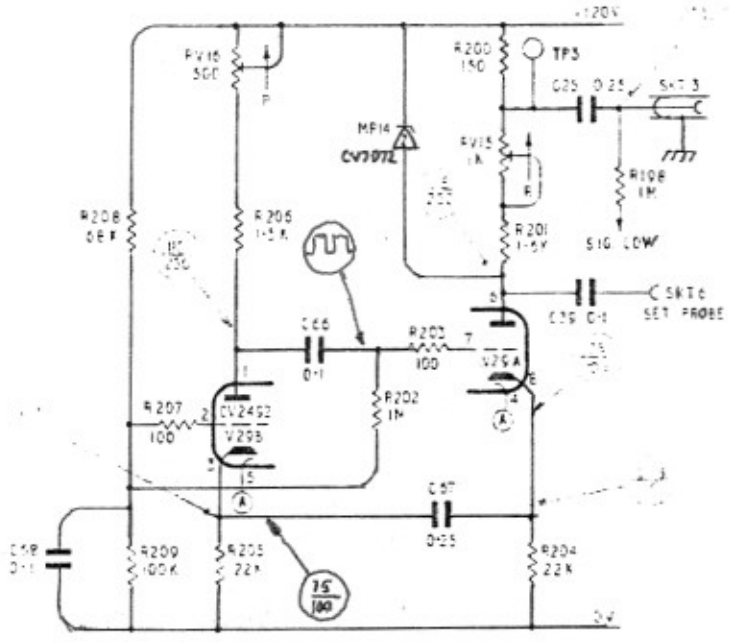

Fig. 16. The Calibrator Unit.

THE BRIGHT-UP AND CATHODE RAY TUBE CIRCUITS

V18 is a double triode connected as a cathode coupled bistable operating at an HT of 140 V between the -1500 V rail and the -1640 V rail. The anode of V18B is directly coupled to the cathodes of the cathode ray tube. During the time-base rest period, the bistable is in such a condition that V18B is cut off and the cathodes of the cathode ray tube are held at -1500 V. When a trigger signal causes V23 to change state, a signal is taken from the anode of V23A and differentiated in C58 and R186. This negative going signal cuts off V18A and causes V18B to conduct. The cathode voltage of the cathode ray tube then moves negative from -1500 V causing the c.r.t. to conduct and give a bright trace. At the end of the sweep when V23 again changes state, the positive going signal at the anode of V23A cuts on V18A causing V18B to cut off. The cathodes of the c.r.t. are then returned to -1500 V cutting off the trace to give flyback suppression. V19

The brilliance of each trace is controlled by a potentiometer connected between the -1500 V rail and -1640 V rail. RV14A controls the Y1 gun and RV13A controls the Y2 gun. RV12 in series with RV13A and RV14A is a preset brilliance control, which determines the range over which the brilliance controls operate.

The potentials for the other electrodes in the c.r.t. are drawn from a resistive chain between -1500 V and +350 V. The focussing electrodes (A2) take their potentials from the focussing potentiometers RV13B and RV14B. The A1 and A3 potentials are drawn from the potentiometer RV17, which is adjusted for minimum astigmatism. Z modulation can be coupled on the grids of the c.r.t. through the capacitor C62. The socket SKT13, through which the 'Z' modulation signal is applied, is located on the external access panel under the hatch in the top of the instrument.

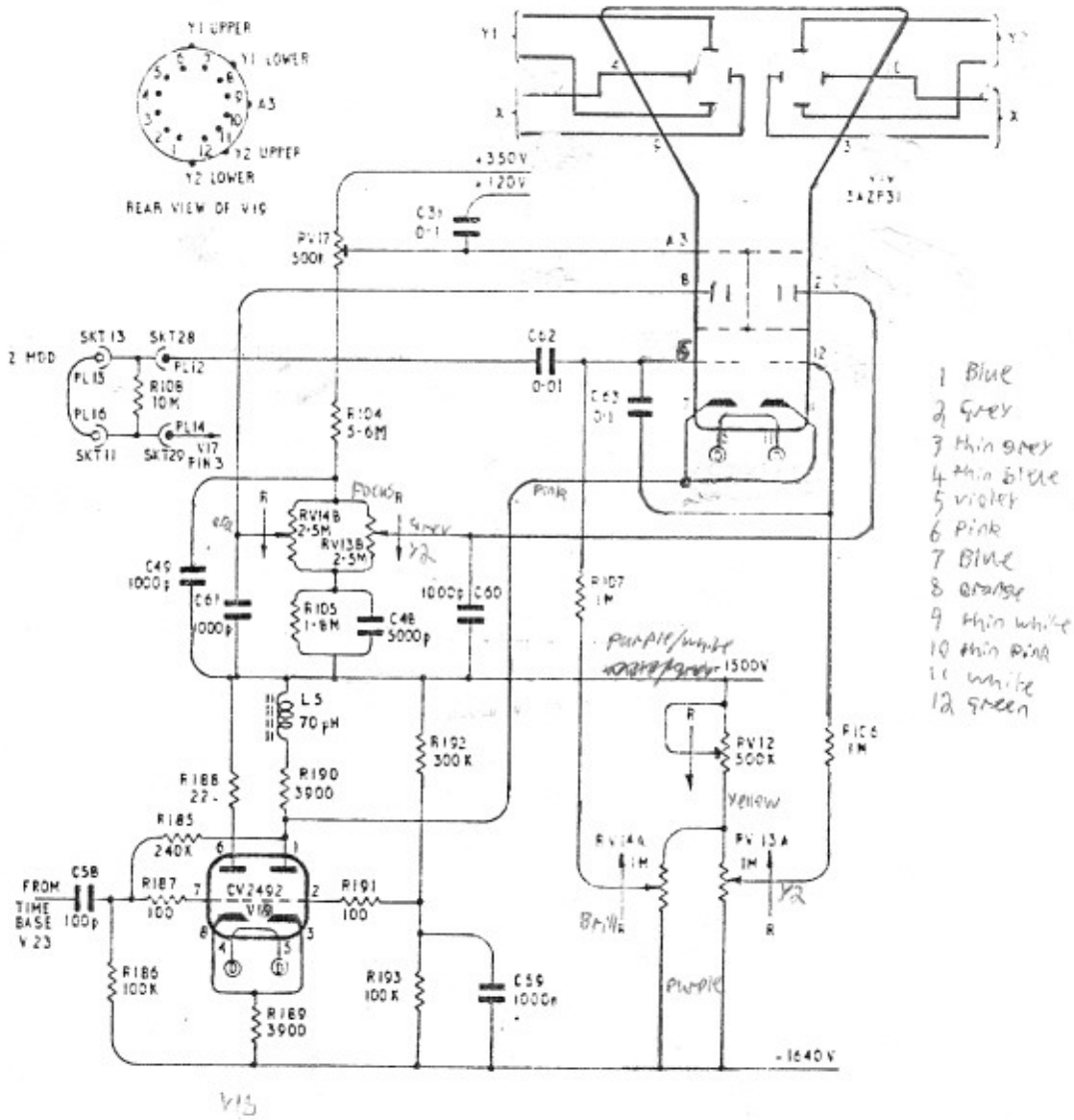

Fig. 17. The Cathode Ray Tube and Bright-Up Circuits.

THE POWER SUPPLIES

The Transformer Unit J.S. Cat. No. 6625-99-914-5027.

When the instrument is to be used supplied from an AC main, the mains transformer T1 is fitted into the space provided. The transformer sub-unit contains a mains input socket, a fuse, a mains voltage selector panel and a mains transformer. The transformer has two primaries, which are accurately wound so that they may be connected in series or in parallel. These tapped primaries are connected to the mains selector panel, which may be adjusted to accept mains voltages from 100 - 125 V in 5 V steps or from 200 - 250 V in 10 V steps. The transformer has eight secondaries, which are connected through socket 5 and plug 3 to the oscilloscope circuits. There are four high voltage windings for supplying HT and four low voltage windings, which supply heater current to the valves. For the purpose of this description the secondary windings are numbered and Table 1 at the end of this section gives a list of the RMS voltage output from each winding and the pins on SKT5, to which each winding is connected.

The 120 V Stabilised Supply

The AC output from winding 1 on the transformer feeds a voltage doubling rectifier system consisting of MR5 and MR6 operating into the reservoir capacitors C33, C34 and C36. The total output voltage generated is +350 V.

Current is drawn from the centre tap of the two capacitors C33 and C34, through a series control pentode V11, to the 120 V line. Variations in the 120 V supply are detected on a negative feedback network and passed through a control amplifier to the grid of the series stabilising valve, V11. This alters the voltage across V11 in such a sense as to oppose the original change.

The control amplifier consists of V25A and V16. Variations in voltage of the 120 V line are detected on the negative feedback network consisting of R94, C38 and R96, and fed onto the control grid of V16. The grid of V25A is referred to the zero volt line by the neon voltage reference tube V10. V25A and V16 are connected as a cathode coupled differential amplifier, and the output to drive the control pentode V11 is taken from the anode of V16.

The cathode potential of the two valves is determined by the voltage across the neon V10 and is at low impedance. The signal low line is taken from these cathodes.

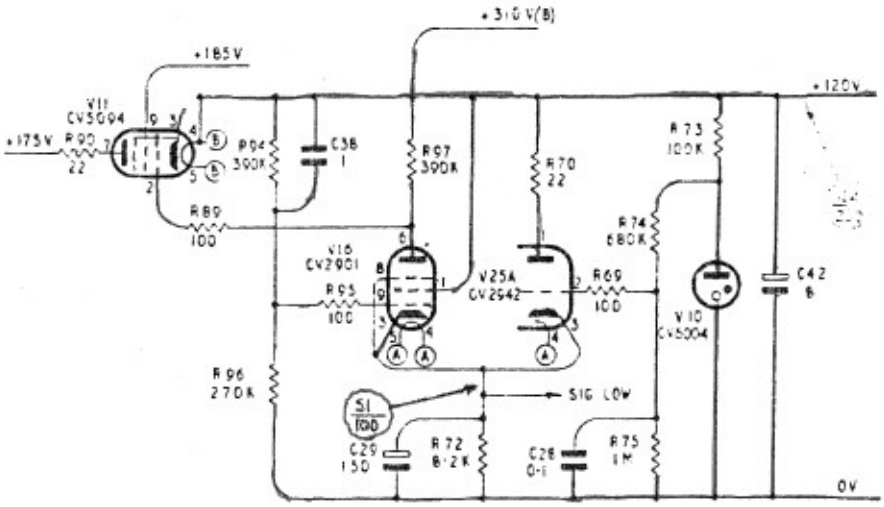

Fig. 18. The 120 V Line.

The 185 V Supply

The full output from the voltage doubling rectifier system, taken across C34 and C33 in series, passes through a cathode follower V9B to give a +185 V supply at low impedance. Since V9B cannot carry all the current required from this line, it is shunted by the resistor R84. The grid potential of the cathode follower is held stable by the voltage reference tube V15, which is connected in series with R88 between the -310 V rail and the + 120V line. The grid of V9B is connected to a resistive potentiometer consisting of R86 and R87 connected across V15. The voltage doubling rectifier system also supplies an output voltage at +350 V unstabilised.

The 310 V and 380 V Supplies

Winding 2 on the transformer feeds a bridge rectifier system consisting of MR1 to MR4 working into the reservoir capacitor C32. The negative of the rectified supply from this winding is connected to the +350 V rail, and the positive gives +380 V. This is available as a supply to feed the X amplifier.

Current is drawn from the +380 V rail through two cathode followers formed by the two halves of V14 to give two supplies at +310 V. These feed the screens of the pentodes in the two Y amplifier channels. The grid voltage of the two cathode followers is held stable at the voltage developed across the voltage reference tubes V12 and V13. These tubes are connected in series with R80 between the +380 V rail and +185 V rail. The resistor R83, connected from the junction of V12 and V13 to the cathode of V14, is provided to ensure that both neons strike.

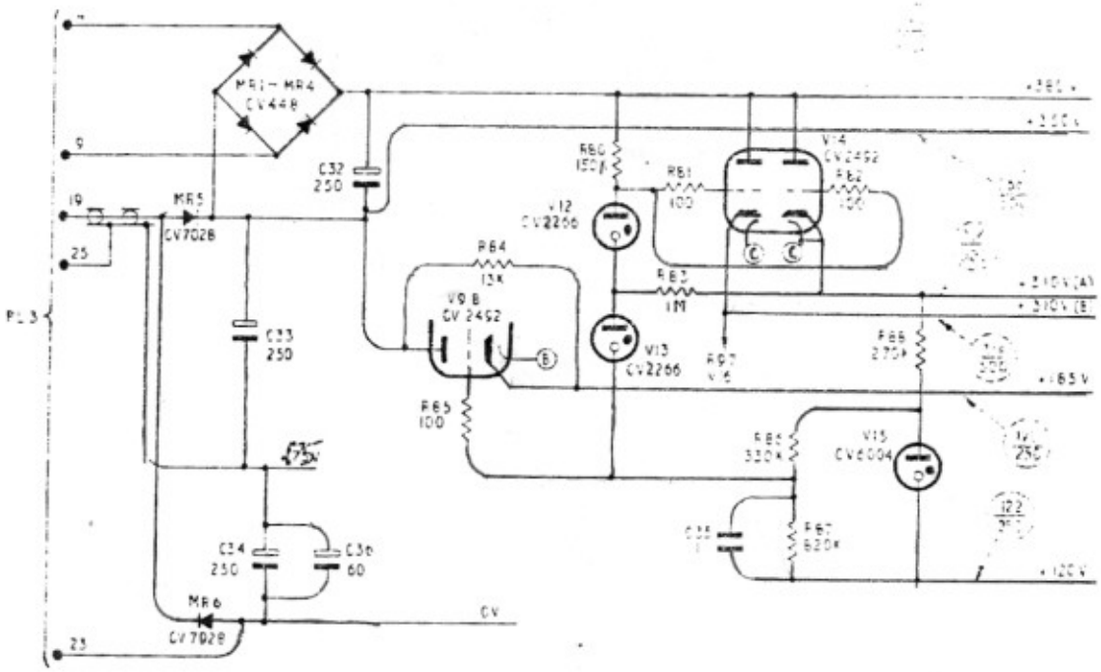

Fig. 19. The HT Supplies.

Heater Supplies

Windings 5, 6, and 7 provide heater current to various valves throughout the oscilloscope.

The EHT Supply

The output from winding number 3 is rectified by a voltage doubling rectifier consisting of MR7 and MR8 working into the reservoir capacitors C40 and C41. This generates an EHT volt ge of -1500 V. The negative side of this supply is connected directly to the cathode ray tube system. The positive of the supply is connected through V17 to the zero line. V17 is a pentode series control valve with its screen connected to the +120 V line and its grid connected to a resistive network b t-ween the +120 V and the -1500 V line. Any variations in the -1500 V line will be DC coupled to the grid of V17 and will affect the anode potential in such a sense as to tend to oppose the change. This gives good stabilisation to the EHT supply.

The -1640V Supply

The output from the fourth winding of the transformer is half wave rectified by MR9 into the smoothing system C51 R102 giving a negative supply of 140 volts. The positive of this supply is connected to the -1500 V line giving a negative line of -1640 V. This 140V HT supply is used for the bright-up bistable circuit.

The eighth winding provides heater voltage for the bright-up bistable valve and the CRT.

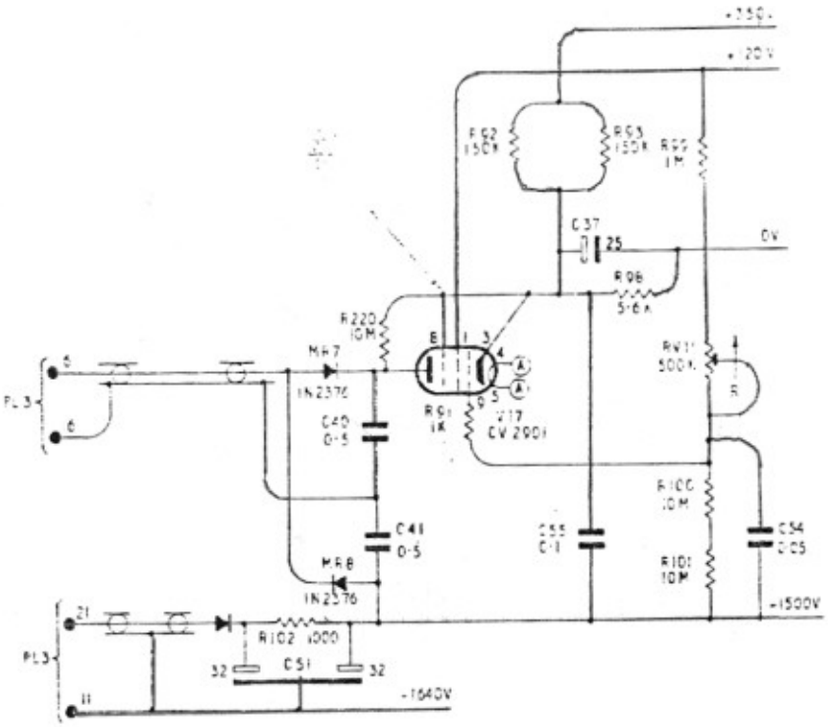

Fig. 20. The EHT Supplies.

Supply Control Circuits

PL1 is a three pin plug situated on the side of the instrument through which the mains supply may be connected to the instrument when the mains transformer is in use. The double pole change-over switch, (SW10), is situated alongside this switch and may be used to select either this plug or the plug on the rear of the transformer unit. S11 is a micro-switch built into the oscilloscop unit. This switch is operated when the mains transformer is plugged in so that PL1 may be connected through SW10 and SW9 to the transformer. The DC sub-unit does not operate S11 so that if a mains supply should be connected to PL1 while the DC sub-unit is in place, the mains supply will not reach the sub-unit and no damage can be done to the instrument.

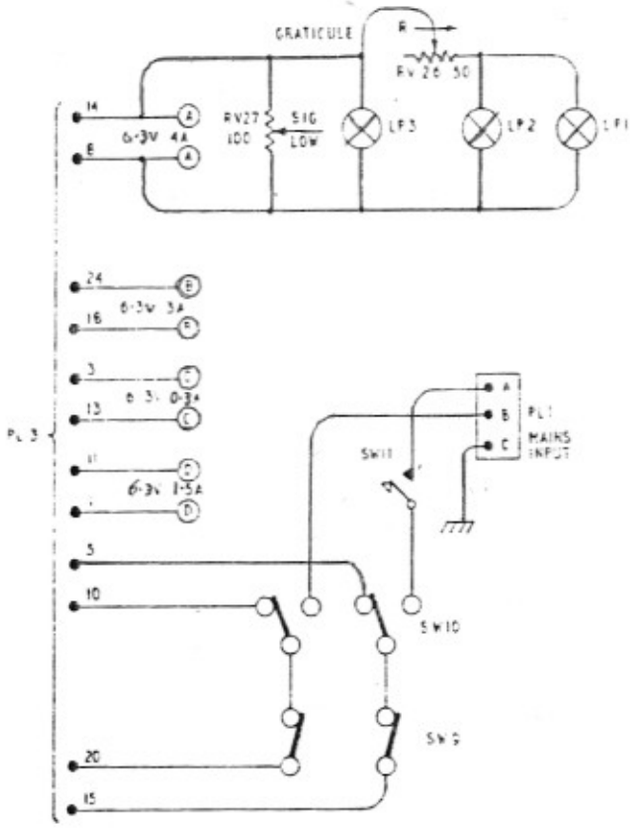

Fig. 21. The Heater Supply and Control Circuits.

The Converter Direct Current J.S. Cat. No. 6625-99-945-0507.

The DC to AC converter is used when the oscilloscope is required to work from a DC supply of between 24 and 30 V. When this converter is used, it plugs into the position otherwise occupied by the mains transformer. It consists of a DC voltage stabilising system, a chopper and a transformer.

DC is connected in plug 1, and the positive side of the supply connects through pins 5 and 10 of SKT1 and through the main on/off switch of the oscilloscope, back through SKT1 on pins 15 and 20, and thence through FS1 into the DC voltage stabilising circuit. VT1 and VT2 in parallel form a series stabilising emitter follower driven on the base from the emitter follower VT3. VT3 is driven from the control amplifier VT4. Variations in the DC supply fed to the chopper are detected in the negative feedback network, R17, RV1, R18, and fed to the base of the amplifier VT4. The emitter of this amplifier is referred to the positive line through the Zener diode MR1. Any variations in the DC fed onto the chopper cause a change in the output from VT4 which varies the signal fed to the emitter followers VT1, 2 and 3, varying the volt drop across these transistors and regulating the DC supply.

The regulated DC is fed onto the chopper circuit which consists of VT5 and 6 in parallel and VT7 and 8 in parallel, together with R19 and MR2, and the transformers T1 and T2. When the DC is first connected to the circuit and resistor R19 and the diode MR2 apply a bias to the pairs of transistors such that they will conduct. Because of unbalance in the circuit, one pair of transistors will conduct more heavily than the other causing the collector voltage to swing by very nearly the supply voltage. The back EMF building up across the primary of the transformer T1 is applied across the primary of the drive transformer T2 in series with the feedback resistor R20. The

DG/

secondary windings of the drive transformer are in such a phase that the transistor pair VT7 and VT8 will be reversed biased and will cut off while the pair VT5 and VT6 will be held in the bottomed condition. When the core of the drive transformer T2 reaches saturation, a rapid increase in primary current will occur, causing an additional volt drop across the feedback resistor, R20. This volt drop will reduce the drive, and the collector current of the transistor pair VT5 and VT6, which were bottomed, starts to decrease causing in turn a reversal of the polarities of the voltages in all windings. The transistor pair VT5 and VT6 is rapidly driven to cut off and the other pair are switched on. These transistors continue in this state until negative saturation of the drive transformer is reached. Circuit switches back to the initial state and the cycle is repeated. The oscillation then continues with the frequency determined by the design of the saturating drive transformer T2, and the valve of the feedback resistance. The secondaries of the output transformer T1, are similar with those of the mains transformer previously described and are connected to socket SKT1 in such a way that SKT1 can mate directly with PL3 in the oscilloscope. Details of the secondary windings are given in Table 2 at end of section.

TABLE 1

Winding No. and Transformer Tag No's.	R.M.S. Output	Socket 5 Connections
1 (11, 12)	140V 135mA	25 and 19
2 (13, 14)	30V 30mA	9 and 4
3 (15, 16)	650V 1mA	16 and 6
4 (17, 18)	120V 10mA	11 and 21
5 (19, 20)	6.3V 1.5A	11 and 1
6 (21, 22)	6.3V 4A	14 and 8
7 (23, 24)	6.3V 3A	24 and 18
8 (25, 26)	6.3V 0.3A	3 and 13

TABLE 2

Winding No. and Transformer Tag No's.	R.M.S. Output	Socket 1 Connections
1 (10, 11)	185V 135mA	19 and 25
2 (6, 7)	35V 25mA	4 and 9
3 (4, 5)	885V 1mA	16 and 6
4 (8, 9)	157V 10mA	21 and 11
5 (19, 20)	6.3V 4A	14 and 8
6 (17, 18)	6.3V 3A	24 and 18
7 (14, 15)	6.3V 1.5A	11 and 1
8 (12, 13)	6.3V 0.3A	3 and 13

Notes:-

1. The voltages shown in red on Figs. 7-21 were measured using an Avo Model 8. The lower figure shows the range, and the upper figure, the reading.

2. The voltages were measured with no input signals to the instrument, and with the time-base quiescent. The stability and level controls were set counter-clockwise without switching to the AUTO position. The spots were on their electrical centres and all gain controls set to maximum.

3. The waveforms provide an indication of operation, but more accurate waveforms appear at the rear of the book. These waveforms were obtained under the following conditions. Time-base set to AUTO, trigger external +ve. An input sinewave of 500mV peak-to-peak 2 kc/s was fed to the trigger socket, and the time-base was set to 1 msec/cm.

SECTION V

SETTING UP AND TEST PROCEDURE

1. Equipment Required

The following equipment will be required in order to carry out the tests called for in this specification.

a) Variac, Variable Transformer 240 V, 50 c/s, 2 Amp.

b) DC Voltmeter of input resistance not less than 20 kV to measure in the range 50 - 2000 V, e.g. Avometer, model 8.

c) RMS Valve Voltmeter of accuracy 0.2% at 280 mV, e.g. Solartron VF 252 standardised at 280 mV, Ref. No. 10S/16828.

d) Capacity Bridge or Meter to read 25 - 50 pF, e.g. Solartron MM 906.

e) LF Oscillator 1 c/s - 1 kc/s, 2% frequency accuracy, e.g. Solartron OS 103.

f) Oscillator 25 c/s - 500 kc/s, 2% frequency accuracy, e.g. Solartron CO 546, Ref. No. 10S/17153,

g) Video Oscillator 50 kc/s - 10 Mc/s, constant amplitude, frequency accuracy 2%, e.g. Solartron DO 905.

h) 1 kc/s Standard Oscillator or Time Mark Generator, frequency accuracy 0.1% e.g. Tektronix 180 A.

j) Resistor, fixed, 220 kΩ, ¼ watt, ± 2%, Cat. No. 5905-99-021-6524, mounted inside a standard BNC plug Cat. No. 5935-99-940-1089.

k) Square Wave Generator, 10 kc/s and 100 kc/s, 0 - 50 V amplitude overshoot less than 1%, e.g. Cintel 1873.

l) Power Supply of 200 - 250 V or 100 - 125 V, 50 c/s single phase.

m) Power Supply of 200 - 250 V or 100 - 125 V, 400 c/s single phase.

2. Preliminary Adjustments

Y1 and Y2 V/CM switches to 100 mV/cm
All GAIN controls to CAL.
STAB. and LEVEL controls fully counter-clockwise
Trigger Selector to Y1+
TIME/CM to 1 msec (Range X1)
TIME/CM FINE to CAL.
X, Y1 and Y2 SHIFT, FOCUS and BRILLIANCE controls to mid-position
SIGNAL LOW/CHASSIS link connected
Y1 and Y2 Mode Switches to AC
Mains switch OFF.

In factory test, all pre-set potentiometers are set to mid-position, except RV11 which is set fully counter-clockwise. This setting is unnecessary during recalibration unless extensive repairs have been carried out or pre-set controls have been replaced.

3. HT Supplies

All current and voltage measurements shall be made with Avometer, Model 8.

Adjust the Mains Selector Panel to 240 V and move the switch (SW10) on the left hand side of the instrument towards the appropriate mains input socket. Connect the Oscilloscope CT 436 to the 50 c/s AC Mains Supply through a Variac set to deliver 240 V. Switch the front panel Mains switch to ON. Measure the voltage with respect to HT negative (Violet coded wire) as shown in table 1.

Table 1

Position	Wire Colours	Reading Volts DC	Limit Volts DC	Avo Range Volts DC
Chassis		-50	49-55	100
V11, Pin 3	Blue/Yellow	-120	114-128	250
V14, Pin 3	Red/Orange	-310	285-325	1000
V9, Pin 8	Brown/Yellow	-185	172-192	250
V14, Pin 8	Red/Yellow	-310	285-325	1000
C33, +end	Brown/Red	-350	340-360*	1000
C32, -end	Red	-380	368-391*	1000

*NOTE: The last two potentials listed above shall differ by approximately 30 volts.

4. EHT Voltage Test

a) By means of the Variac, lower the mains input supply to the Oscilloscope CT 436 by 10%. Connect the Avometer Model 8 on range 100 V DC between Pin 3 of V17 and the positive end of C40. Adjust RV11 so that the Avometer reads 55 V DC ± 5 V. Return the mains supply voltage to 240 V and check that the 55 V DC reading has increased. Measure the EHT with respect to HT negative (Voilet coded wire), see table 2.

Table 2

Position	Reading Volts DC	Limit Volts DC	Avo Range Volts DC
C55 Base	-1500	1420-1500	2500

If this potential exceeds 1500 V readjust RV11 for 1490 V reading.

b) Measure the -1640 V line with respect to C55 base (-1500 V) see table 3.

Table 3

Position	Reading Volts DC	Limit Volts DC	Avo Range Volts DC
C51 Can	-150	135-150	250

Check the readings in tables 1, 2 and 3 with the instrument connected to a suitable 400 c/s supply.

5. Hum Level Adjustments

a) Retaining the 400 c/s supply to the instruments, set Y1 controls as follows:-

V/CM to 100 mV
Y1 mode switch to AC x 10 GAIN
GAIN to CAL.
TIME/CM to 1 msec.

Join Y1 input to chassis at the input socket via a 220kΩ screened resistor and set RV27 for minimum hum level on trace. Disconnect the 400 c/s supply and re-connect the 240 V, 50 c/s supply.

6. Cathode Ray Tube Circuit

a) Set BRILLIANCE controls to maximum, and X, Y1 and Y2 SHIFT controls until two spots are visible.

NOTE: DO NOT FOCUS EXCESSIVELY BRIGHT STATIONARY SPOTS.

b) Ensure that the time-base is not running, i.e. stationary spots are displayed. Adjust RV12 until both spots are easily visible, but not excessively bright, and check that they can be focussed by using the appropriate FOCUS controls (RV13 and RV14). De-focus the spots and adjust RV17 (astigmatism control) until the spots are circular. Re-focus spots.

7. Trigger Circuit

a) Set the controls as follows:-

TIME/CM switch to X5
FINE and STAB. controls fully clockwise

Adjust RV21 to the centre of the range over which the time-base free runs.

b) Connect the Oscillator (F) to the input of Y1, and adjust it to deliver a frequency of 1000 c/s, ± 10%. Set the amplitude to give ½cm picture height. Switch the trigger selector to Y1+, connect Y2 to test point 1 (colour coded brown, see Fig. 21) and adjust the LEVEL control to the centre of that part of its range over which a signal is visible. Connect the Y2 input to test point 2 (colour coded Red, see Fig. 21) and adjust RV20 to the centre of the range over which the bistable triggers, i.e. a square-wave output at test point 2. Remove the 1000 c/s input.

Switch

TIME/CM to 10 msec range
Trigger Selector EXT+.
LEVEL control to AUTO.

Short circuit trigger input and adjust RV18 for 50/50 square-wave (about 40 c/s) at Test Point 2.

c) Using the Oscillator (F), feed a 500 mV (177 mV rms) ± 10%, 100 c/s ± 10% sine-wave to the input of Y1.

Set the controls as follows:-
Y1 V/CM control to 100 mV
Y1 input switch to DC
GAIN to CAL.
Trigger Selector to Y1+.
LEVEL to AUTO
STAB. control fully counter-clockwise
TIME/CM to 1 msec.

Rotate STAB. control until time-base just triggers with the picture correctly locked. Reduce the signal input amplitude until the picture height is 3mm pk-pk. The display shall remain synchronised. (Some slight re-adjustment of the STAB. control may be necessary). Turn trigger selector to Y1-. The display shall remain synchronised.

d) Maintaining controls as above, increase signal amplitude until the display height is 5 cm pk-pk. Rotate LEVEL control clockwise until the time-base triggers. Check that the LEVEL control moves the start of the time-base to any point on the waveform of the display with the exception of the first 3mm of the negative-going-edge.

e) Switch trigger selector to Y1+. Check that the LEVEL control moves the start of the time-base to any point on the waveform of the display with the exception of the first 3mm of the positive-going-edge.

f) With the signal input fed to Y2 and trigger selector to Y2+, repeat paragraph 7. The same conditions shall apply for the LEVEL control.

g) Feed the 100 c/s signal input to either Y1 or Y2 amplifier and the EXT. TRIG. input simultaneously, switch trigger selector to EXT+ and repeat paragraph 7. The same conditions shall apply for the LEVEL control.

h) Remove the input signals to Y amplifier and the EXT. TRIG. input. Set -

Trigger selector to SUP. FREQ +
TIME/CM to 10 msec.

The time-base shall trigger correctly and be synchronised to the supply.

8. Synchronisation Check

a) Using Oscillator (G) feed a 500 mV pk-pk 10%, 5 Mc/s, ± 10% sine-wave to the input of Y1. Set the controls as follows.

V/CM to 100 mV/cm
Trigger Selector to Y1+
TIME/CM to 1 μsec.

b) A synchronised display can be obtained by adjusting the LEVEL and 'STAB.' controls.

9. Calibrator Unit

a) Measure the calibrator frequency by feeding the calibrator to Y1, and a standard 1 kc/s (0.1% accuracy) oscillator (H) to the X amplifier. Adjust RV16 for a stationary single loop display. Alternatively feed 1 msec marker pips (0.1% accuracy) into Y2 and adjust RV16 for one cycle of calibrator square-wave for each marker pip.

b) Measure calibrator amplitude with Solartron valve voltmeter VF 252, (C) or similar average reading r.m.s. calibrated valve voltmeter, and set RV15 for 277.5 mV r.m.s. reading.

NOTE: The valve voltmeter shall have been previously standardised at this reading ± 0.1%.

10. Time-Base and X Amplifier

a) Rotate the X SHIFT control and check that either end of the trace may be brought on to the tube face at all settings of the X GAIN control.

b) Switch the TIME MULTIPLIER to EXT., feed a 100 kc/s square-wave from the Generator (K) to the X input socket. Feed a time-base waveform or sine wave (synchronised to the square wave) to the Y1 amplifier and adjust the controls for a suitable display. Adjust L6 and L7 for optimum square wave response, i.e. no overshoot. Ensure that the cores are in similar positions in the coils.

c) Feed the CAL. waveform to Y1, trigger the time-base from Y1-. Set TIME/CM switch to 1 msec/cm and adjust X GAIN control to give 1 cycle/cm.

NOTE: ½ c/s must NOT be used in any measurements as the mark/space ratio is not necessarily 50-50.

d) Carefully slacken the set screws of the X GAIN control knob and rotate counter-clockwise to the stop, taking care not to alter the setting of the spindle. Tighten the screws and check that the setting gives 1 cycle/cm.

e) With the trigger selector set to Y1+, feed 1 μsec marker pips from a TEKTRONIX 180A marker generator (H) or 1 Mc/s from the video oscillator (G) (2% or better accuracy) to the input socket of Y1, and lock the time-base on the 1 μsec/cm range. Set FINE and X GAIN controls to CAL. and adjust C90 for 1 cycle/cm, ignoring the first cycle of the display.

Set FINE and X GAIN controls to CAL. Use suitable oscillators or the time marker generator to feed sine waves or marker pips ± 1% to the Y1 input at the frequencies shown in table 4, and trigger the time-base from Y1+.

The calibration at each of the TIME/CM control settings listed shall be within the indicated limits. The first cycle of the display shall not be included in the measurement on the 1 μsec range.

Table 4

TIME/CM	Multiplier	Input Frequency	Length of Time Scale for 5 cycles	Limits
100 mS	X1	10 c/s	5 cm	4.25 - 5.75 cm
10 mS	X1	100 c/s	5 cm	4.75 - 5.25 cm
10 mS	X2	50 c/s	5 cm	4.75 - 5.25 cm
10 mS	X5	20 c/s	5 cm	4.75 - 5.25 cm
1 mS	X1	1 kc/s	5 cm	4.75 - 5.25 cm
100 μS	X1	10 kc/s	5 cm	4.75 - 5.25 cm
10 μS	X1	100 kc/s	5 cm	4.75 - 5.25 cm
1 μS	X1	1 Mc/s	5 cm	4.75 - 5.25 cm

f) Set TIME/CM control to 1 msec, feed approximately 10 kc/s sine wave from Solartron CO 546 (F) to the input of Y1 amplifier. Adjust the input frequency until any 1 cm division of the time scale contains 10 cycles of sine wave. The number of cycles in any other 1 cm division of the time scale shall lie between 9.5 and 10.5. The first 5 mm of the trace shall NOT be included in the measurement.

g) Set TIME/CM multiplier to TB. OFF. Feed 1 V pk-pk (0.354 V r.m.s.) 50 kc/s ± 2% sine wave from Solartron CO 546 (F) to the input socket of X amplifier. Set the X GAIN to maximum, and note the trace length. Turn the X GAIN to CAL. and note new length. The change shall be 10 times ± 25%.

With X GAIN at CAL. adjust input amplitude for 4 cm trace length. Increase input frequency (maintaining constant amplitude) to 500 kc/s ± 3% The trace length shall be not less than 2.8 cm.

Repeat the bandwidth measurement with X GAIN at maximum. The same conditions apply.

11. Y Amplifier

a) Set Y1 input switch to DC, short circuit input to chassis and adjust RV3 so that the position of the trace does not alter when the V/CM and GAIN controls are rotated.

b) Using a Solartron CO 546 (F) monitored by a valve voltmeter (C)*, feed a 1 kc/s sine wave of 1 V pk-pk amplitude ± 1% into the input socket of Y1.

Set the controls as follows:-

V/CM switch to 500 mV/cm
Y1 input switch to DC
Y1 GAIN control to CAL.

c) Adjust RV4 for 2 cm picture height. Decrease the input amplitude to 200 mV/cm pk-pk ± 1%. Set V/CM switch to 100 mV/cm. Adjust RV2 for 2 cm picture height. Repeat the adjustment of RV4 and RV2 from * until the calibration is correct on both ranges.

d) Reduce input amplitude to 20 mV pk-pk ± 1%. Set V/CM switch to 100 mV/cm. Set Y1 input switch to AC x 10 GAIN. Adjust RV5 for 2 cm picture height, centred on the upper calibrated graticule line.

e) Using a suitable square wave generator, (K) feed a 2 V pk-pk 10 kc/s square wave to the input socket of Y1. Set Y1 input switch to DC and the V/cm switch to 1 V/CM. Adjust C4B for optimum square wave. Turn V/CM switch to 10 V/CM and increase the voltage from generator. Adjust C2B for optimum square wave.

f) Connect a Solartron MM 906 or other suitable capacity meter or bridge to the input socket of Y1. Set V/CM control to 100 mV/cm and adjust C6 for 30 pF, or if this is not possible, the nearest measured input capacity.

Turn V/CM control to 1 V/cm and adjust C4A for the same capacity reading as on 100 mV/ range.

Turn V/CM control to 10 V/cm and adjust C2A for the same capacity reading as on 100 mV range.

g) Using a Cossor Square Wave Generator, type 1090, feed a square wave of 330 kc/s to the input socket of Y1.

NOTE: A generator with a known square wave corner must be used.

Set V/CM control to 100 mV/cm and the Y1 GAIN control to CAL. Trigger the time-base on 1 μsec/cm range.

Centre the trace on the upper calibrated graticule line, using the X GAIN control to expand the trace to say, 3 cm across the flat top. Adjust DL1 in conjunction with C11 to obtain a square corner and a flat top to the square wave.

12. Amplitude Calibration

Short circuit Y1 input to chassis and set trace to a known position on tube face.

Turn V/CM control to each position in its range and check that the trace is not displaced more than ± 2 mm over the range of switch positions.

Disconnect the short circuit and connect the Oscillator (F) to the Y1 input. Feed in a 1 kc/s ± 10% sine wave.

Set Y1 input switch to DC and the Y1 GAIN control to CAL. The amplitude of the signal shown in table 5 shall be monitored with a 1% or better accuracy voltmeter (C). The amplitude of the displayed picture shall fall within the limits indicated with the attenuator switch (V/CM) set as shown in the table.

Table 5

Attenuator Position	Input Volts rms	pk-pk	Picture Size	Limits
100 mV	70.7 mV	200 mV	2 cm	1.9 - 2.1 cm
200 mV	141.4 mV	400 mV	2 cm	1.9 - 2.1 cm
500 mV	353.5 mV	1 V	2 cm	1.9 - 2.1 cm
1 V	707.0 mV	2 V	2 cm	1.9 - 2.1 cm
2 V	1.414V	4 V	2 cm	1.9 - 2.1 cm
5 V	3.535V	10 V	2 cm	1.9 - 2.1 cm
10 V	7.07 V	20 V	2 cm	1.9 - 2.1 cm
20 V*	14.14 V	40 V	2 cm	1.9 - 2.1 cm
50 V*	35.35 V	100 V	2 cm	1.9 - 2.1 cm
100 V*	70.7 V	200 V	2 cm	1.9 - 2.1 cm

* Variac connected to 50 c/s mains supply may be used as a signal source for these checks.

Repeat the first line of table 5 above with Y1 input switch to AC. The amplitude of the displayed picture shall fall within the limits indicated.

Set V/CM switch to 100 mV, the Y1 input switch to AC x 10 GAIN and the Y1 GAIN to CAL. Reduce the input voltage to 20 mV pk-pk (7.07 mV r.m.s.) Check that the amplitude of the displayed picture falls within the limits in line 1 of table 5.

Using conditions as in table 5 above, check that the Y1 GAIN control gives continuous coverage between ranges.

13. Frequency Response

a) Using a suitable square wave generator, e.g. Cintel 1873, feed a 10 kc/s square wave (rise time 50 μsec or faster) of appropriate level to Y1 input socket. Set Y1 mode switch to DC and the Y1 GAIN control to CAL. The displayed waveform on each position of the attenuator switch (V/CM) shall be substantially the same shape as the input waveform. Any overshoots or ripples shall not exceed 2% of the pulse height.

b) With conditions as for table 5, feed a 50 kc/s ± 2% sine wave from an oscillator, Solartron DO 905 (G) to the Y1 input socket. Set the V/CM switch to 100 mV. Adjust the oscillator amplitude to give a 2 cm picture height centred on the upper calibrated graticule line. Increase the frequency to 6 Mc/s ± 2% maintaining the oscillator output constant ± 2%. The displayed picture amplitude shall be not less than 1.4 cm.

c) Repeat the bandwidth check (13b) on V/CM switch ranges of 200 mV, 500 mV, 1 V and 10V, increasing the input amplitude as appropriate to give a 2 cm picture at 50 kc/s in each case, except on 10 V range where 1 cm picture may be used, reducing to 0.7 cm at 6 Mc/s.

d) Using the Oscillator (F), feed a 1 kc/s ± 2% sine wave to the input socket of Y1.

Set the controls as follows:-

V/CM switch to 100 mV
Y1 mode switch to AC x 10 GAIN
Y1 GAIN to CAL.

Adjust the amplitude of the input signal to give a 2 cm display on the tube face, centred on the upper calibrated graticule line. Increase the input frequency to 500 kc/s ± 2% at the same time maintaining the oscillator output at a constant level ± 2%. The displayed picture amplitude shall be not less than 1.4 cm.

e) Using Oscillator (E) set the frequency to 1 kc/s and adjust the amplitude to give a 2cm picture. Reduce the oscillator frequency to 3 c/s. The amplitude of the displayed picture shall be not less than 1.4 cm.

f) Set the Y1 amplifier controls for maximum gain. Connect the input socket of Y1 to chassis at the socket via a screened 220 kΩ resistor. The amplitude of the residual hum and noise on the trace shall not exceed 2 mm pk-pk.

g) Repeat the residual hum measurement (13f) above with the oscilloscope connected to a suitable 400 c/s AC mains supply. Disconnect 400 c/s supply and re-connect 240 V 50 c/s AC supply.

14. Y2 Amplifier

Repeat test as in (11a) adjust RV8 as necessary.

Repeat tests as in (11b, c, and d) adjusting RV9, RV7 and RV10 as necessary.

Repeat tests as in (11e) adjusting C17B and C14B as necessary.

Repeat tests as in (11f) adjusting C16, C17A and C14A to give the same input capacity as Y1 on all ranges.

Repeat tests as in (11g) adjusting DL2 and C22 as necessary.

Tests as in (12) and (13) shall be applied to Y2 amplifier, with the trace centred on the lower calibrated graticule line.

RESISTORS, FIXED
Class Group No. 5905
Country of Origin Code 99.

Circuit Ref.	Description	J.S. No. C.C.A.	Value Ohms	Tol. %	Rating Watts
R1	Composition, Grade 1, non-insulated	* Painton 73	990k	1	
R2	Composition, Grade 1, non-insulated	021-6206	10k	1	
R3	Composition, Grade 1, non-insulated	* Painton 73	900k	1	
R4	Composition, Grade 1, non-insulated	021-6445	100k	1	
R5	Composition, Grade 1, non-insulated	021-6967	1M	1	
R6	Composition, Grade 2, insulated	022-1109	100	10	
R7	Composition, Grade 1, non-insulated	021-5660	1200	2	
R8	Composition, Grade 1, non-insulated	021-5861	8200	2	
R9	Composition, Grade 1, non-insulated	021-5555	470	1	
R10	Composition, Grade 1, non-insulated	021-5735	2700	1	
R11	Composition, Grade 1, non-insulated	021-5655	1200	1	
R12	Composition, Grade 1, non-insulated	021-5861	8200	2	
R13	Composition, Grade 2, insulated	022-1109	100	10	
R14	Composition, Grade 2, insulated	022-2151	15k	10	
R15	Composition, Grade 2, insulated	022-3163	1M	10	
R16	Composition, Grade 2, insulated	022-1109	100	10	
R17	Composition, Grade 1, non-insulated	021-5740	2700	2	
R18	Composition, Grade 1, non-insulated	021-6293	22k	2	
R19	Composition, Grade 1, non-insulated	021-6293	22k	2	
R20	Composition, Grade 1, non-insulated	021-5740	2700	2	
R21	Composition, Grade 2, insulated	022-1109	100	10	
R22	Composition, Grade 2, insulated	022-2184	27k	10	
R23	Composition, Grade 2, insulated	022-3163	1M	10	
R24	Composition, Grade 2, insulated	022-1109	100	10	
R25	Wire wound, Grade 1, insulated	011-3338	5600	5	3
R26	Film, Grade 2, non-insulated	* Welwyn F32	4700	5	2
R27	Composition, Grade 2, insulated	022-1109	100	10	
R28	Composition, Grade 2, insulated	022-1109	100	10	
R29	Composition, Grade 1, non-insulated	021-5600	680	2	
R30	Film, Grade 2, non-insulated	* Welwyn F32	4700	5	2
R31	Wire wound, Grade 1, insulated	011-3338	5600	5	3
R32	Composition, Grade 2, non-insulated	022-1109	100	10	
R33	Composition, Grade 1, non-insulated	021-5705	200	1	
R34	Composition, Grade 1, non-insulated	* Painton 73	990k	1	
R35	Composition, Grade 1, non-insulated	021-6206	10k	1	
R36	Composition, Grade 1, non-insulated		900k	1	
R37	Composition, Grade 1, non-insulated	021-6445	100k	1	
R38	Composition, Grade 1, non-insulated	021-6967	1M	1	
R39	Composition, Grade 2, insulated	022-1109	100	10	
R40	Composition, Grade 1, non-insulated	021-5861	8200	2	

* Indicates Commercial Type No. where no J.S. No. exists.

RESISTORS, FIXED
Class Group No. 5905
Country of Origin Code 99.

Circuit Ref.	Description	J.S. No. C.C.A.	Value Ohms	Tol. %	Rating Watts
R41	Composition, Grade 1, non-insulated	021-5660	1200	2	¼
R42	Composition, Grade 1, non-insulated	021-5555	470	1	¼
R43	Composition, Grade 1, non-insulated	021-5735	2700	1	¼
R44	Composition, Grade 1, non-insulated	021-5655	1200	1	¼
R45	Composition, Grade 1, non-insulated	021-5861	8200	2	½
R46	Composition, Grade 2, insulated	022-1109	100	10	¼
R47	Composition, Grade 2, insulated	022-2151	15k	10	¼
R48	Composition, Grade 2, insulated	022-3163	1M	10	¼
R49	Composition, Grade 2, insulated	022-1109	100	10	¼
R50	Composition, Grade 1, non-insulated	021-5740	2700	2	¼
R51	Composition, Grade 1, non-insulated	021-6293	22k	2	¾
R52	Composition, Grade 1, non-insulated	021-6293	22k	2	¾
R53	Composition, Grade 1, non-insulated	021-5740	2700	2	¼
R54	Composition, Grade 2, insulated	022-1109	100	10	¼
R55	Composition, Grade 2, insulated	022-2184	27k	10	¼
R56	Composition, Grade 2, insulated	022-3163	1M	10	¼
R57	Composition, Grade 2, insulated	022-1109	100	10	¼
R58	Wire wound, Grade 1, insulated	011-3338	5600	5	3
R59	Composition, Grade 2, insulated	022-1109	100	10	¼
R60	Composition, Grade 2, insulated	022-1109	100	10	¼
R61	Film, Grade 2, non-insulated	* Welwyn F32	4700	5	2
R62	Composition, Grade 1, non-insulated	021-5600	680	2	¼
R63	Film, Grade 2, insulated	* Welwyn F32	4700	5	2
R64	Wire wound, Grade 1, insulated	011-3338	5600	5	3
R65	Composition, Grade 2, insulated	022-1109	100	10	¼
R66	Composition, Grade 1, non-insulated	021-5780	3900	2	¼
R67	Composition, Grade 1, non-insulated	021-5780	3900	2	¼
R68	Not fitted				
R69	Composition, Grade 2, insulated	022-1109	100	10	¼
R70	Composition, Grade 2, insulated	022-1025	22	10	¼
R71	Composition, Grade 2, insulated	022-2172	22k	10	¼
R72	Composition, Grade 2, insulated	022-2123	8200	10	½
R73	Composition, Grade 2, insulated	022-3037	100k	10	¼
R74	Composition, Grade 1, non-insulated	021-6991	680k	2	¼
R75	Composition, Grade 1, non-insulated	021-6966	1M	2	¼
R76	Not fitted				
R77	Composition, Grade 1, non-insulated	021-5705	2000	1	¼
R78	Composition, Grade 2, insulated	022-3079	220k	10	¼
R79	Composition, Grade 2, insulated	022-3037	100k	10	¼
R80	Composition, Grade 2, insulated	022-3058	150k	10	¼

* Indicates Commercial Type No. where no J.S. No. exists.

RESISTORS, FIXED
Class Group No. 5905
Country of Origin Code 99.

Circuit Ref.	Description	J.S. No. C.C.A.	Value Ohms	Tol. %	Rating Watts
R81	Composition, Grade 2, insulated	022-1109	100	10	¼
R82	Composition, Grade 2, insulated	022-1109	100	10	¼
R83	Composition, Grade 2, insulated	022-3163	1M	10	¼
R84	Wire wound, Vitreous	*Welwyn AW3115 H.S	13k	1	3
R85	Composition, Grade 2, insulated	022-1109	100	10	¼
R86	Composition, Grade 1, non-insulated	021-6928	330k	2	¼
R87	Composition, Grade 1, non-insulated	021-7801	820k	2	¼
R88	Composition, Grade 2, insulated	022-3091	270k	10	¼
R89	Composition, Grade 2, insulated	022-1109	100	10	¼
R90	Composition, Grade 2, insulated	022-1025	22	10	¼
R91	Composition, Grade 2, insulated	022-2004	1000	10	¼
R92	Composition, Grade 1, non-insulated	021-8753	150k	2	¼
R93	Composition, Grade 1, non-insulated	021-8753	150k	2	¼
R94	Composition, Grade 1, non-insulated	021-6945	390k	1	¼
R95	Composition, Grade 2, insulated	022-1109	100	10	¼
R96	Composition, Grade 1, non-insulated	021-6889	270k	1	¼
R97	Composition, Grade 2, insulated	022-3109	390k	10	¼
R98	Composition, Grade 1, non-insulated	021-5820	5600	2	¼
R99	Composition, Grade 1, non-insulated	021-6966	1M	2	¼
R100	Composition, Grade 1, non-insulated	021-6706	10M	2	1½
R101	Composition, Grade 1, non-insulated	021-6706	10M	2	1½
R102	Composition, Grade 2, insulated	022-2004	1000	10	¼
R103	Composition, Grade 2, insulated	022-1214	680	10	¼
R104	Composition, Grade 1, non-insulated	021-6694	5.6M	2	1¼
R105	Composition, Grade 1, non-insulated	021-6784	1.8M	2	¼
R106	Composition, Grade 2, insulated	022-3163	1M	10	¼
R107	Composition, Grade 2, insulated	022-3163	1M	10	¼
R108	Composition, Grade 2, insulated	022-3289	10M	10	¼
R109	Composition, Grade 1, non-insulated	021-5780	3900	2	¼
R110	Composition, Grade 2, insulated	022-3163	1M	10	¼
R111	Composition, Grade 2, insulated	022-1109	100	10	¼
R112	Composition, Grade 1, non-insulated	021-5800	4700	2	¼
R113	Composition, Grade 1, non-insulated	021-5861	8200	2	½
R114	Composition, Grade 1, non-insulated	021-5800	4700	2	¼
R115	Composition, Grade 2, insulated	022-1109	100	10	¼
R116	Composition, Grade 2, insulated	022-3163	1M	10	¼
R117	Composition, Grade 1, non-insulated	021-6987	2.2M	2	¼
R118	Composition, Grade 1, non-insulated	021-6987	2.2M	2	¼
R119	Composition, Grade 2, insulated	022-1109	100	10	¼
R120	Composition, Grade 2, insulated	022-1025	22	10	¼

* Indicates Commercial Type No. where no J.S. No. exists.

RESISTORS, FIXED
Class Group No. 5905
Country of Origin Code 99.

Circuit Ref.	Description	J.S. No. C.C.A.	Value Ohms	Tol. %	Rating Watts
R121	Composition, Grade 1, non-insulated	021-6232	12k	2	1/4
R122	Composition, Grade 1, non-insulated	021-5760	3300	2	1/4
R123	Composition, Grade 2, insulated	022-1109	100	10	1/4
R124	Composition, Grade 1, non-insulated	021-6966	1M	2	1/4
R125	Composition, Grade 1, non-insulated	021-6966	1M	2	1/4
R126	Composition, Grade 2, insulated	022-2151	15k	10	1/4
R127	Composition, Grade 2, insulated	022-2142	12k	10	1/4
R128	Composition, Grade 1, non-insulated	021-6450	100k	2	1/4
R129	Composition, Grade 1, non-insulated	021-5780	3900	2	1/4
R130	Composition, Grade 1, non-insulated	021-6410	68k	2	1/4
R131	Composition, Grade 2, insulated	022-1109	100	10	1/4
R132	Composition, Grade 2, insulated	022-2004	1000	10	1/4
R133	Composition, Grade 1, non-insulated	021-5802	4700	2	1/4
R134	Composition, Grade 2, insulated	022-2004	1000	10	1/4
R135	Composition, Grade 2, insulated	022-1109	100	10	1/4
R136	Composition, Grade 1, non-insulated	021-6331	33k	2	1/4
R137	Composition, Grade 1, non-insulated	021-6311	27k	2	1/4
R138	Composition, Grade 1, non-insulated	021-6345	39k	1	1/4
R139	Composition, Grade 1, non-insulated	021-6445	100k	1	1/4
R140	Composition, Grade 2, insulated	022-1109	100	10	1/4
R141	Composition, Grade 2, insulated	022-1025	22	10	1/4
R142	Composition, Grade 1, non-insulated	021-6931	330k	1	1/4
R143	Composition, Grade 1, non-insulated	021-6889	270k	1	1/4
R144	Composition, Grade 2, insulated	022-1109	100	10	1/4
R145	Composition, Grade 2, insulated	022-2046	2200	10	1/4
R146	Composition, Grade 1, non-insulated	021-6212	10k	2	1/4
R147	Composition, Grade 1, non-insulated	021-6212	10k	2	1/4
R148	Composition, Grade 2, insulated	022-1109	100	10	1/4
R149	Composition, Grade 2, insulated	022-3226	3.3M	10	1/4
R150	Composition, Grade 2, insulated	022-3289	10M	10	1/4
R151	Composition, Grade 2, insulated	022-2214	47k	10	1/4
R152	Composition, Grade 2, insulated	022-2172	22k	10	1/4
R153	Composition, Grade 1, non-insulated	021-6490	150k	2	1/4
R154	Composition, Grade 1, non-insulated	021-6952	470k	2	1/4
R155	Composition, Grade 1, non-insulated	021-6450	100k	2	1/4
R156	Composition, Grade 2, insulated	022-1109	100	10	1/4
R157	Composition, Grade 2, insulated	022-1025	22	10	1/4
R158	Composition, Grade 2, insulated	022-2151	15k	10	1/4
R159	Composition, Grade 2, insulated	022-1109	100	10	1/4
R160	Composition, Grade 1, non-insulated	021-6445	100k	1	1/4

RESISTORS, FIXED
Class Group No. 5905
Country of Origin Code 99.

Circuit Ref.	Description	J.S. No. C.C.A.	Value Ohms	Tol. %	Rating Watts
R161	Composition, Grade 1, non-insulated	021-6296	24k	1	¼
R162	Composition, Grade 1, non-insulated	021-6979	1.5M	1	¼
R163	Composition, Grade 1, non-insulated	021-6922	300k	1	¼
R164	Composition, Grade 1, non-insulated	021-6922	300k	1	¼
R165	Composition, Grade 2, insulated	022-1109	100	10	¼
R166	Composition, Grade 1, non-insulated	021-5800	4700	2	¼
R167	Composition, Grade 1, non-insulated	021-6211	10k	2	¼
R168	Composition, Grade 2, insulated	022-1025	22	10	¼
R169	Composition, Grade 2, insulated	022-3079	220k	10	¼
R170	Composition, Grade 2, insulated	022-3100	330k	10	¼
R171	Composition, Grade 2, insulated	022-3070	180k	10	¼
R172	Composition, Grade 1, non-insulated	021-6886	270k	2	¼
R173	Composition, Grade 2, insulated	022-1109	100	10	¼
R174	Film, Grade 2, non-insulated	*Welwyn F33	10k	5	4
R175	Composition, Grade 2, insulated	022-1109	100	10	¼
R176	Composition, Grade 1, non-insulated	021-5822	5600	2	¾
R177	Film, Grade 2, non-insulated	*Welwyn F33	10k	5	4
R178	Composition, Grade 2, insulated	022-1109	100	10	¼
R179	Composition, Grade 1, non-insulated	021-5822	5600	2	¾
R180	Composition, Grade 2, insulated	022-1109	100	10	¼
R181	Composition, Grade 2, insulated	022-3163	1M	10	¼
R182	Composition, Grade 1, non-insulated	021-6886	270k	2	¼
R183	Composition, Grade 1, non-insulated	021-6519	200k	2	¼
R184	Composition, Grade 2, insulated	022-2172	22k	10	¼
R185	Composition, Grade 1, non-insulated	021-6880	240k	1	¼
R186	Composition, Grade 1, non-insulated	021-6445	100k	1	¼
R187	Composition, Grade 2, insulated	022-1109	100	10	¼
R188	Composition, Grade 2, insulated	022-1025	22	10	¼
R189	Composition, Grade 1, non-insulated	021-5781	3900	2	½
R190	Composition, Grade 1, non-insulated	021-5781	3900	2	½
R191	Composition, Grade 2, insulated	022-1109	100	10	¼
R192	Composition, Grade 1, non-insulated	021-6922	300k	1	¼
R193	Composition, Grade 1, non-insulated	021-6445	100k	1	¼
R194	Composition, Grade 2, insulated	022-3163	1M	10	¼
R195	Composition, Grade 2, insulated	022-3163	1M	10	¼
R196	Composition, Grade 2, insulated	022-3163	1M	10	¼
R197	Composition, Grade 2, insulated	022-3163	1M	10	¼
R198	Composition, Grade 2, insulated	022-3163	1M	10	¼
R199	Composition, Grade 2, insulated	022-1214	680	10	¼
R200	Composition, Grade 1, non-insulated	021-5435	150	1	¼

* Indicates Commercial Type No. where no J.S. No. exists.

RESISTORS, FIXED
Class Group No. 5905
Country of Origin Code 99.

Circuit Ref.	Description	J.S. No. C.C.A.	Value Ohms	Tol. %	Rating Watts
R201	Wire wound, Vitreous	*Welwyn AW3115 HS	1600	1	3
R202	Composition, Grade 2, insulated	022-3163	1M	10	¼
R203	Composition, Grade 2, insulated	022-1109	100	10	¼
R204	Composition, Grade 1, non-insulated	021-6291	22k	2	¼
R205	Composition, Grade 1, non-insulated	021-6291	22k	2	¼
R206	Composition, Grade 1, non-insulated	021-5680	1500	2	¼
R207	Composition, Grade 2, insulated	022-1109	100	10	¼
R208	Composition, Grade 1, non-insulated	021-6405	68k	1	¼
R209	Composition, Grade 1, non-insulated	021-6445	100k	1	¼
R210	Composition, Grade 2, insulated	022-2004	1000	10	¼
R211	Composition, Grade 2, insulated	022-2088	4.7k	10	¼
R212	Composition, Grade 2, insulated	022-3163	1M	10	¼
R213	Composition, Grade 2, insulated	022-2172	22k	10	¼
R214	Composition, Grade 2, insulated	022-2172	22k	10	¼
R215	Composition, Grade 2, insulated	022-3163	1M	10	¼
R216	Composition, Grade 2, insulated	022-3163	1M	10	¼
R217	Composition, Grade 2, insulated	022-1067	47	10	¼
R218	Composition, Grade 2, insulated	022-1067	47	10	¼
R219	Composition, Grade 2, insulated	022-1067	47	10	¼
R220	Composition, Grade 2, insulated	022-3289	10M	10	¼
R221	Composition, Grade 2, insulated	022-3133	560k	10	¼

* Indicates Commercial Type No. where no J.S. No. exists.

RESISTORS VARIABLE
Class Group No. 5905
Country of Origin Code 99.

Circuit Ref.	Description	J.S. No. C.C.A.	Value Ohms	Tol. %	Rating Watts
RV1	Composition, (Dual Conc.)	*Plessey ED	2500/ 100k	20	¼
RV2	Composition, preset	*Morganite BJ.SI.SP	250	20	¼
RV3	Composition, preset	*Morganite BJ.SI.SP	250k	20	¼
RV4	Composition, preset	*Morganite BJ.SI.SP	500	20	¼
RV5	Composition, preset	*Morganite BJ.SI.SP	100	20	¼
RV6	Composition, (Dual Conc.)	*Plessey ED	2500/ 100k	20	2
RV7	Composition, preset	*Morganite BJ.SI.SP	250	20	¼
RV8	Composition, preset	*Morganite BJ.SI.SP	250k	20	¼
RV9	Composition, preset	*Morganite BJ.SI.SP	500	20	¼
RV10	Composition, preset	*Morganite BJ.SI.SP	100	20	¼
RV11	Composition, preset	110-2758	500k	20	¼
RV12	Composition, preset	110-2758	500k	20	¼
RV13	Composition, (Dual Conc.)	* A.B. Metals	1M/ 2.5M	20	¼
RV14	Composition, (Dual Conc.)	* A.B. Metals	1M/ 2.5M	20	¼
RV15	Wire wound, preset	011-9489	1000	10	½
RV16	Composition, preset	*Morganite BJ.SI.SP	500	20	¼
RV17	Composition, preset	110-2758	500k	20	¼
RV18	Composition, preset	110-2758	500k	20	¼
RV19	Composition, (Dual Conc. with switch)	*Plessey EDS	10k/ 10k/sw	20	2
RV20	Composition, preset	*Morganite BJ.SI.SP	50k	20	¼
RV21	Composition, preset	*Morganite BJ.SI.SP	50k	20	¼
RV22	Composition,	026-2407	250k	20	¼
RV23	Composition, (Dual Conc.)	*Plessey E.D.	2500/ 100k	20	2
RV24	Wire wound, preset	011-9489	1000	10	½
RV25	Wire wound, preset	011-9489	1000	10	½
RV26	Wire wound	*Colvern 1298/9	50	10	½
RV27	Composition, preset	011-9845	100	10	¼

* Indicates Commercial Type No. where no JS. No. exists.

CAPACITORS
Class Group No. 5910
Country of Origin Code 99.

Circuit Ref.	Description	J.S. No. C.C.A.	Value µF	Tol. %	Rating Volts
C1	Metalised, plastic, tubular	*Hunt AF103	0.1	20	600
C2	Variable, preset	*Steatite S. Triko 6R/N500	2x3/15pF		
C3	Polystyrene, tubular	*Suflex HS	820pF	2	500
C4	Variable, preset	*Steatite S. Triko 6R/N500	2x3/15pF		
C5	Polystyrene, tubular	*Suflex HS	68pF	2	500
C6	Variable, preset	999-0771	0.7/4pF		1000
C7	Ceramic, tubular, insulated	011-8270	2.2pF	.5pF	750
C8	Metalised, plastic, tubular	*Hunt AF103	0.1	20	600
C9	Metalised, plastic, tubular	*Hunt AF103	0.1	20	600
C10	Metalised, polyester	*Mullard C296AA/A100K	0.1	10	125
C11	Variable, preset	*Steatite 12 Triko 6/30/D50	6/30pF		
C12	Polystyrene, tubular	911-8430	120pF	2	500
C13	Metalised, plastic, tubular	*Hunt AF103	0.1	20	600
C14	Variable, preset	*Steatite S. Triko 6R/N500	2x3/15pF		
C15	Electrolytic, reversable	*Plessey CE4301	500	-20 +50	12
C16	Polystyrene, tubular	*Suflex HS	820pF	2	500
C17	Variable, preset	*Steatite S. Triko 6R/N500	2x3/15pF		
C18	Variable, preset	999-0771	0.7/4pF		1000
C19	Polystyrene, tubular	*Suflex HS	68pF	2	500
C20	Metalised, plastic, tubular	*Hunt AF103	0.1	20	600
C21	Metalised, polyester	*Mullard C296AA/A100K	0.1	10	125
C22	Variable, preset	*Steatite 12 Triko 6/30/D50	6/30pF		
C23	Polystyrene, tubular	911-8430	120pF	2	500
C24	Ceramic, tubular, insulated	011-8270	2.2pF	.5pF	750
C25	Electrolytic, reversable	*Plessey CE4301	500	-20 +50	12
C26	Metalised, plastic, tubular	*Mullard C296AC/A10K	0.01	10	400
C27	Metalised, plastic, tubular	*Mullard C296AC/A10K	0.01	10	400
C28	Metalised, polyester	*Mullard C296AC/A100K	0.1	10	125
C29	Electrolytic, tubular, S/L	*Plessey CE4263/1	150	-20 +50	100
C30	Metalised, plastic, tubular	*Hunt AM202	0.1	20	250
C31	Metalised, plastic	*Hunt AM202	0.1	20	250
C32	Electrolytic, tubular, S/L	014-5517	250	-20 +100	50
C33	Electrolytic, tubular	*Plessey CE647/16	250	-20 +50	275
C34	Electrolytic, tubular	*Plessey CE647/16	250	-20 +50	275
C35	Metalised, polyester	*Mullard C296AA/A1M	1	10	125

* Indicates Commercial Type No. where no J.S. No. exists.

CAPACITORS
Class Group No. 5910
Country of Origin Code 99.

Circuit Ref.	Description	J.S. No. C.C.A.	Value µF	Tol. %	Rating Volts
C36	Electrolytic, tubular, S/L	*Plessey CE5248/12	60	-20 +50	200
C37	Electrolytic, tubular, S/L	014-5508	25	-20 +100	50
C38	Metalised, polyester	*Mullard C296AA/A1M	1	10	125
C39	Metalised, plastic, tubular	*Hunt AM202	0.1	20	250
C40	Paper, rectangular	011-1377	0.5	20	1000
C41	Paper, rectangular	011-1377	0.5	20	1000
C42	Electrolytic, tubular, S/L	014-5502	8	-20 +100	150
C43	Ceramic, disc.	*Hunt TB6000/CD14K2	0.01	-20 +80	500
C44	Polystyrene, tubular	011-9221	27pF	10	500
C45	Ceramic, tubular, insulated	011-6274	4.7pF	.5pF	750
C46	Polystyrene, tubular	011-9221	27pF	10	500
C47	Ceramic, tubular, insulated	011-6274	4.7pF	.5pF	750
C48	Ceramic, tubular	*Erie K350081BD	5000pF	-20 +40	500
C49	Ceramic, disc.	940-9489	.001	-20 +80	1.25k
C50	Metalised, plastic, tubular	*Mullard C296AC/A10K	.01	10	400
C51	Electrolytic, tubular (unsleeved)	*Plessey CE5096	32+32	-20 +50	200
C52	Electrolytic, tubular, insulated	*Plessey CE1331	8	-20 +100	25
C53	Electrolytic, tubular, insulated	*Plessey CE1331	8	-20 +100	25
C54	Paper, tubular, insulated	011-6413	0.05	20	2.5k
C55	Paper, tubular, insulated	933-0124	0.1	20	2k
C56	Metalised, plastic, tubular	*Mullard 296AC/A10K	0.01	10	400
C57	Metalised, plastic, tubular	*Mullard 296AC/A10K	0.01	10	400
C58	Polystyrene, tubular	G.E.C.	100pF	10	2k
C59	Polystyrene, tubular	011-9212	1000pF	5	500
C60	Ceramic, disc.	940-9489	.001	-20 +80	1.25k
C61	Ceramic, disc.	940-9489	.001	-20 +80	1.25k
C62	Paper, tubular, insulated	*T.C.C. CP55G0	0.01	20	2.5k
C63	Metalised, plastic, tubular	*Hunt AM202	0.1	20	250
C64	Metalised, plastic, tubular	*Mullard C296AA/A10K	0.01	10	125
C65	Metalised, plastic, tubular	*Hunt AM203	0.25	20	250
C66	Metalised, polyester	*Mullard C296AA/A100K	0.1	10	125
C67	Polyester	*G.E.C.	0.25	2	150
C68	Metalised, polyester	*Mullard C296AA/A100K	0.1	10	125
C69	Ceramic, tubular	*Erie K350081/BD	5000pF	+40 -20	500
C70	Ceramic, tubular, insulated	011-6270	2.2pF	.5pF	750

*Indicates Commercial Type No. where no J.S. No. exists.

CAPACITORS
Class Group No. 5910
Country of Origin Code 99.

Circuit Ref.	Description	J.S. No. C.C.A.	Value µF	Tol. %	Rating Volts
C71	Ceramic, tubular insulated	011-8270	2.2pF	0.5pF	750
C72	Metalised, plastic, tubular	*Hunt AF103	0.1	20	600
C73	Metalised, plastic, tubular	*Hunt AF103	0.1	20	600
C74	Metalised, plastic, tubular	*Hunt AM203	0.25	20	250
C75	Metalised, plastic, tubular	913-5410	1	20	250
C76	Metalised, polyester	*Mullard C296AA/A1M	1	10	125
C77	Polystyrene, tubular	011-9206	100pF	10	500
C78	Polystyrene, tubular	011-9204	47pF	10	500
C79	Polystyrene, tubular	011-9202	22pF	10	500
C80	Polystyrene, tubular	*Suflex HS	22pF	0.5pF	500
C81	Metalised, plastic, tubular	913-5410	1	20	250
C82	Polystyrene, tubular	011-9200	10pF	10	500
C83	Ceramic, tubular, insulated	011-8272	3.3pF	.5pF	750
C84	Metalised, paper, tubular	*Hunt WP45A	10	10	150
C85	Polyester	*G.E.C.	1	2	150
C86	Metalised, polyester, tubular	*Wima Tropyfol	0.1	2	400
C87	Polystyrene, tubular	*G.E.C.	0.01	2	125
C88	Polystyrene, tubular	*Suflex HS	1000pF	2	500
C89	Polystyrene, tubular	911-8431	56pF	2	500
C90	Variable, preset	016-7006	3/30pF		75
C91	Metalised, plastic, tubular	*Mullard C296AC/A10K	0.01	10	125
C92	Metalised, polyester	*Mullard C296AA/A100K	0.1	10	125
C93	Metalised, plastic, tubular	*Mullard C296AA/A10K	0.01	10	400
C94	Ceramic, disc.	*Hunts TB6000/CD14K/2	0.01	-20 +80	500
C95	Ceramic, disc.	*Hunts TB6000/CD14K/2	0.01	-20 +80	500

* Indicates Commercial Type No. where no J.S. No. exists.

VALVES
Class Group No. 5960
Country of Origin Code 99

Circuit Ref.	Description	J.S. No. C.C.A.	Value	Tol.	Rating
V1	Double triode	000-2492			
V2	Double triode	000-2492			
V3	Pentode	000-3998			
V4	Pentode	000-3998			
V5	Double triode	000-2492			
V6	Double triode	000-2492			
V7	Pentode	000-3993			
V8	Pentode	000-3998			
V9	Double triode	000-2492			
V10	Voltage stabiliser	000-6004			
V11	Pentode	000-5094			
V12	Voltage stabiliser	000-2266			
V13	Voltage stabiliser	000-2266			
V14	Double triode	000-2492			
V15	Voltage stabiliser	000-6004			
V16	Pentode	000-2901			
V17	Pentode	000-2901			
V18	Double triode	000-2492			
V19	Cathode ray tube	*Etel 3AZP31			
V20	Double triode	000-2492			
V21	Double triode	000-2492			
V22	Double triode	000-2492			
V23	Double triode	000-2492			
V24	Double triode	000-2492			
V25	Double triode	000-2492			
V26	Voltage stabiliser	000-6004			
V27	Pentode	000-3998			
V28	Pentode	000-3998			
V29	Double triode	000-2492			

SEMI CONDUCTORS
Class Group No. 5960
Country of Origin Code 99

Circuit Ref.	Description	J.S. No. C.C.A.	Value	Tol.	Rating
MR1	Germanium diode	000-0448			
MR2	Germanium diode	000-0448			
MR3	Germanium diode	000-0448			
MR4	Germanium diode	000-0448			
MR5	Silicon diode	000-7028			

*Indicates Commercial Type No. where no J.S. No. exists.

SEMI CONDUCTORS
Class Group No. 5960
Country of Origin Code 99.

Circuit Ref.	Description	J.S. No. C.C.A.	Value	Tol.	Rating
MR7	Silicon diode	*Int. Rect's IN2376			
MR8	Silicon diode	*Int. Rect's IN2376			
MR9	Silicon diode	000-7028			
MR10	Germanium diode	000-7047			
MR11	Germanium diode	000-7047			
MR12	Germanium diode	000-7047			
MR13	Germanium diode	000-7047			
MR14	Silicon zener diode	000-7072			
MR15	Germanium diode	000-0448			
MR16	Germanium diode	000-0448			

INDUCTORS
Class Group No. 5930
Country of Origin Code 99.

Circuit Ref.	Description	J.S. No. C.C.A.	Value	Tol.	Rating
L1	Choke R.F. fixed	*Solartron 294128	15μH		
L2	Choke R.F. fixed	*Solartron 293128	15μH		
L3	Choke R.F. fixed	*Solartron 293128	15μH		
L4	Choke R.F. fixed	*Solartron 293128	15μH		
L5	Choke R.F. fixed	*Solartron 293817	70μH		
L6	Choke R.F. variable	*Solartron 293832	1.3mH		
L7	Choke R.F. variable	*Solartron 293832	1.3mH		
L8	Choke R.F. fixed	*Solartron 293817	70μH		

MISCELLANEOUS
Class Group No.
Country of Origin Code 99.

Circuit Ref.	Description	J.S. No. C.C.A.
T1	Transformer	**WTB165764
DL1	Delay network	**WTB165776
DL2	Delay network	**WTB165775

* Indicates Commercial Type No. where no J.S. No. exists.
** Indicates Ministry Reference No. where no J.S. No. exists.

MISCELLANEOUS
Class Group No. 5935
Country of Origin Code 99.

Circuit Ref.	Description	J.S. No. C.C.A.
SKT1	Socket, fixed, B.N.C.	911-6872
SKT2	Socket, fixed, B.N.C.	911-6872
SKT3	Socket, fixed, B.N.C.	911-6872
SKT4	Socket, fixed B.N.C.	911-6872
SKT5	Socket, 25-way	932-5985
SKT6	Socket, fixed	**10H/21727
SKT7	Socket, fixed	**10H/21727
SKT8	Socket, fixed	**10H/21727
SKT9	Not fitted	
SKT10	Not fitted	
SKT11	Socket, fixed	**10H/21727
SKT12	Not fitted	
SKT13	Socket, fixed	**10H/21727
SKT14	Socket, fixed	**10H/21727
SKT15	Socket, fixed	**10H/21727
SKT16	Socket, fixed	**10H/21727
SKT17	Socket, fixed	**10H/21727
SKT18	Socket, fixed	**10H/21727
SKT19	Socket, fixed	**10H/21727
SKT20	Socket, fixed	**10H/21727
SKT21	Not fitted	
SKT22	Not fitted	
SKT23	Not fitted	
SKT24	Not fitted	
SKT25	Not fitted	
SKT26	Not fitted	
SKT27	Socket, fixed	**10H/21727
SKT28	Socket, fixed	**10H/21727
SKT29	Socket, fixed	**10H/21727
SKT30	Not fitted	
SKT31	Not fitted	
SKT32	Socket, fixed, B.N.C.	911-6872
PL1	Plug, 3-way, fixed, Mk IV	056-0565
PL2	Plug, 3-way, fixed, MkIV	056-0565
PL3	Plug, 25-way	*McMurdo XP25
PL4	Plug	932-5985
PL5	Plug	932-5985
PL6	Not fitted	
PL7	Not fitted	
PL8	Plug	932-5985
PL9	Plug	932-5985
PL10	Not fitted	

** Indicates Ministry Reference No. where no J.S. No. exists.

*Indicates Commercial Type No. where no J.S. No. exists.

MISCELLANEOUS
Class Group No. 5935
Country of Origin Code 99.

Circuit Ref.	Description	J.S. No. C.C.A.
PL11	Not fitted	
PL12	Plug	932-5985
PL13	Plug	932-5985
PL14	Plug	932-5985
PL15	Plug	932-5985
PL16	Plug	932-5985
TL1	Terminal, screw connector	**WTA165709
TL2	Terminal, screw Pillar	**WTA165698
LP1	Lamp, miniature	**X959119
LP2	Lamp, miniature	**X959119
LP3	Lamp, miniature	**X959119
F1	Fuse, 2 Amp, miniature	*B&L. ERC. L734
MSP1	Mains selector panel, MP2463 Complete with plug, MP2464	*McMurdo 279002

Class Group No. 5905
Country of Origin Code 99

S1	Switch, wafer	**WTB 165765
S2	Switch, wafer	**WTB 165766
S3	Switch, wafer	**WTB 165765
S4	Switch, wafer	**WTB 165766
S5	Switch, wafer	**WTB 165767
S6	Switch (Refer RV19)	*Plessey EDS
S7	Switch, wafer	**WTB 165768
S8	Switch, wafer	**WTB 165769
S9	Switch, toggle, DP/DT	051-0504
S10	Switch, toggle, DP/DP	051-0504
S11	Switch, sensitive, V3	051-0080

* Indicates Commercial Type No. where no J.S. No. exists.
** Indicates Ministry Reference No. where no J.S. No. exists.

Setting Up and Test Procedure

for the

Converter Direct Current.

1. Equipment Required.

The following additional equipment is required for the tests called for in this specification :

a) Insulation Tester 500 V, e.g. Megger.

b) Power Supply of 0-30 V d.c. e.g. Solartron AS 959.

c) General Purpose Oscilloscope, e.g. Solartron CD 1014.2.

d) Dynamometer Voltmeter ; range 0-15 V, e.g. Model Cambridge 47635/4.

2. Preliminary Checks.

Disconnect the converter from the oscilloscope CT 436. To accomplish this, first disconnect the main d.c. supply to the converter by un-plugging the power lead. Secondly, unscrew the three captive screws located through holes in the cover of the converter. The converter may then be withdrawn from the rear of the oscilloscope.

Insulation and Continuity.

WARNING. Extreme care must be taken when applying a high voltage insulation tester, e.g. Megger, to the Converter as irreparable damage may be caused to semi-conductors.

Check insulation resistance with the Megger connected between the following points. The resistance indicated on the Megger should be not less than 100 megohms.

a) PL1 + and chassis.

b) PL1 - and chassis.

c) Pins, 1,3,4,6,8,9,11,13,14,15,16,18,19,20,21,24,25 of SK1 and chassis.

d) Pins, 1,3,4,6,8,9,11,13,14,15,16,18,19,20,21,24,25 of SK1 and PL1 +.

With the Avometer, check for continuity between the following points :

a) Pins 15 and 20 on SK1.

b) Pins 5 and 10 on SK1.

c) PL1 + and Pin 5 on SK1.

3. Preliminary Adjustments.

Plug in the converter to the CT 436 oscilloscope. Connect the dynamometer voltmeter across the terminals of the panel lamp in the CT 436. Set the output of the power supply AS 959 to 27 volts, and connect this output voltage to the input plug (PL1) of the converter. Switch on the CT 436 and immediately adjust RV1 in the converter to give a reading of 6.3 volts on the meter. Check that the CT 436 functions correctly. Allow a warming up period of not less than 30 minutes.

4. Setting Up and Performance Checks.

After the warming up period has elapsed, check that the dynamometer voltmeter still indicates 6.3 volts. Re-adjust RV1 to correct for any drift in voltage.

Vary the output voltage of the AS 959 from 30 volts to 24 volts, noting the dynamometer voltmeter reading in each case. The 6.3 volts reading on the meter must not vary by more than ± 7% e.g. 0.5 V r.m.s. approximately. Reset the output of the AS 959 to 27 volts and check that the dynamometer voltmeter reading indicates 6.3 volts.

Remove the dynamometer voltmeter from across the lamp terminals and use this meter to check that the other 6.3 volt outputs from the converter at the following points in the CT 436 are 6.3 volts ± 3%, e.g. 0.2 V r.m.s. approximately.

a) Pins 4 and 5 on V4.

b) Pins 4 and 5 on V14.

c) Pins 5 and 11 on V19 (CRT Base).

By means of the Avometer, check that the HT outputs from the converter are correct by ensuring that the voltages are within the limits laid down in Tables 1 and 2 of Section V in the setting up procedure of the CT 436.

5. Waveform Check.

With the CD 1014.2 oscilloscope (ISOLATED FROM MAINS EARTH) monitor the waveform across the 6.3 volts pilot lamp in the CT 436. The rise and fall time of the waveform should be approximately 100 μsecs.

Components List

for

The Converter Direct Current

J.S. Cat. No. 6625-99-945-0507

RESISTORS, FIXED.
Class Group No. 5905.
Country of Origin Code 99.

Circuit Ref.	Description	J.S. No. C.C.A.	Value Ohms	Tol. %	Rating Watts
R1	Wire wound, Vitreous	011-9802	4.7	5	6
R2	Wire wound, Vitreous	011-9802	4.7	5	6
R3	Wire wound, Vitreous	011-9802	4.7	5	6
R4	Wire wound, Self-supporting	** WTA165883	0.68	5	
R5	Wire wound, Self-supporting	** WTA165883	0.68	5	
R6	Wire wound, Self-supporting	** WTA165883	0.68	5	
R7	Composition, Grade 2, insulated	022-1109	100	10	¼
R8	Composition, Grade 2, insulated	022-1025	22	10	¼
R9	Wire wound, Vitreous	011-9802	4.7	5	6
R10	Wire wound, Vitreous	011-9802	4.7	5	6
R11	Wire wound, Vitreous	011-9802	4.7	5	6
R12	Wire wound, Self-supporting	** WTA165883	0.68	5	
R13	Wire wound, Self-supporting	** WTA165883	0.68	5	
R14	Wire wound, Self-supporting	** WTA165883	0.68	5	
R15	Composition, Grade 2, insulated	022-1214	680	10	¼
R16	Composition, Grade 2, insulated	022-2006	1000	10	½
R17	Composition, Grade 1, non-insulated	021-5580	560	2	¼
R18	Composition, Grade 1, non-insulated	021-5680	1500	2	¼
R19	Composition, Grade 2, insulated	022-2027	1500	10	½
R20	Wire wound, Vitreous	011-3373	100	5	6
R21	Wire wound, Vitreous	011-3276	15	5	3
R22	Wire wound, Vitreous	011-3276	15	5	3
R23	Wire wound, Vitreous	011-3276	15	5	3
R24	Wire wound, Vitreous	011-3276	15	5	3
R25	Not fitted				
R26	Composition, Grade 2, insulated	022-2109	6800	10	¼

RESISTORS VARIABLE.

RV1	Wire wound	*Reliant MV	250	10	½

CAPACITORS.
Class Group No. 5910.
Country of Origin Code 99.

Circuit Ref.	Description	J.S. No. C.C.A.	Value µF	Tol. %	Rating Volts
C1	Electrolytic, tubular, sleeved	014-5516	250	-20 +100	25
C2	Metalised, paper, insulated	011-9839	2	25	200
C3	Ceramic, Disc. H.V.	*Erie N3300/CD622	180pF	10	8000
C4	Ceramic, Disc. H.V.	*Erie N3300/CD622	180pF	10	8000

SEMI-CONDUCTORS.

Circuit Ref.	Description	Inter-Service Ref. No.
VT1	Transistor	CV7084
VT2	Transistor	CV7084
VT3	Transistor	*OC22
VT4	Transistor	*OC139
VT5	Transistor	CV7085
VT6	Transistor	CV7085
VT7	Transistor	CV7085
VT8	Transistor	CV7085
MR1	Silicon Zener Diode	CV7070
MR2	Silicon Diode	CV7026

MISCELLANEOUS.

Circuit Ref.	Description	Solartron Part No.	Inter-Service Ref. No.
X1	Thermistor		*S.T.C. CZ8A
T1	Transformer	295087	
T2	Transformer	295086	
FS1	Fuse link 7 A		*Belling & Lee L693
SK1	Socket, 25-way		*McMurdo XS25
PL1	Plug, Electrical		Z560555

* Indicates Commercial Type No. where no J.S. No. exists.
** Indicates Ministry Drawing No.

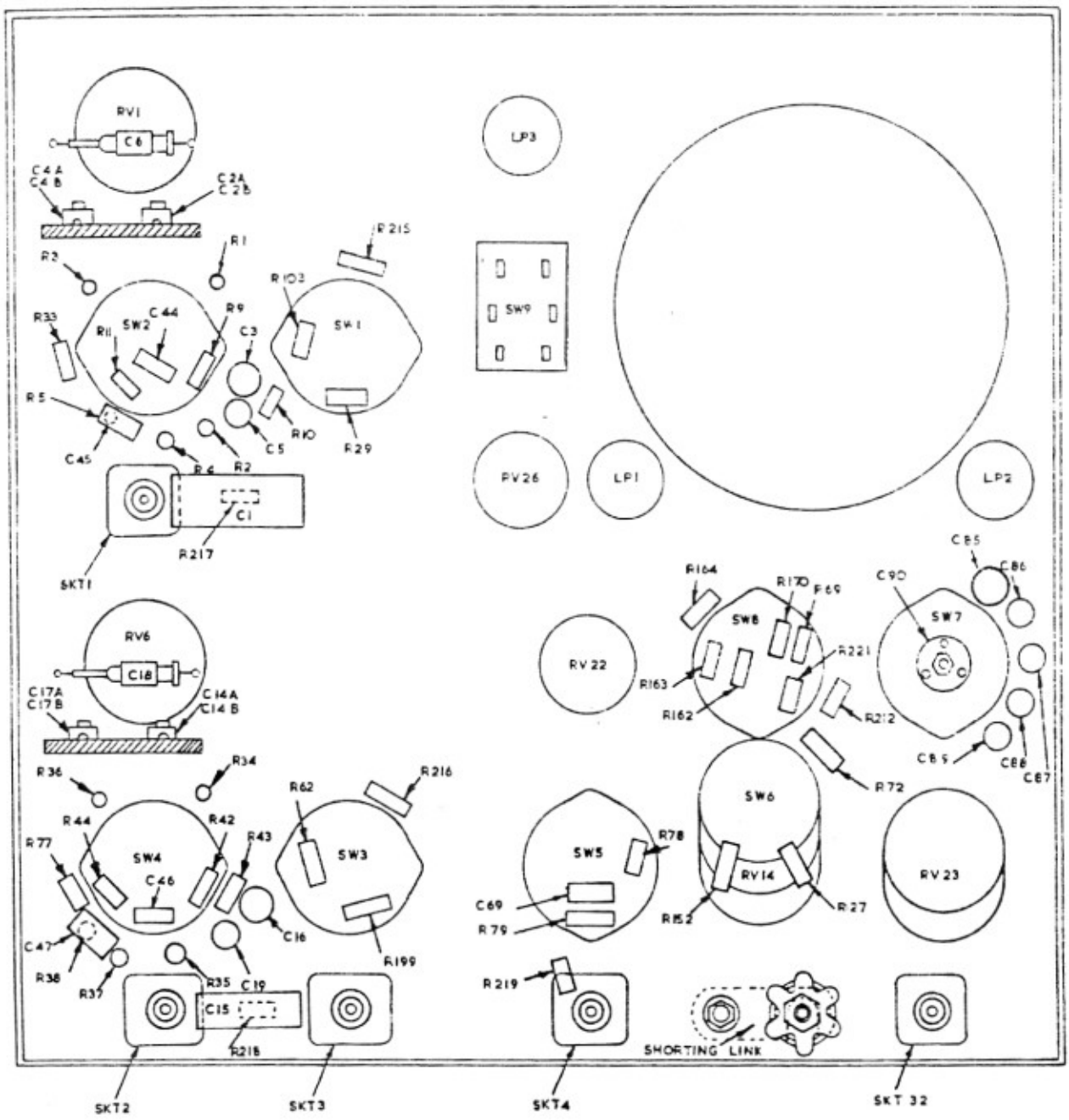

Fig. 22. Component location, Front panel, rear view

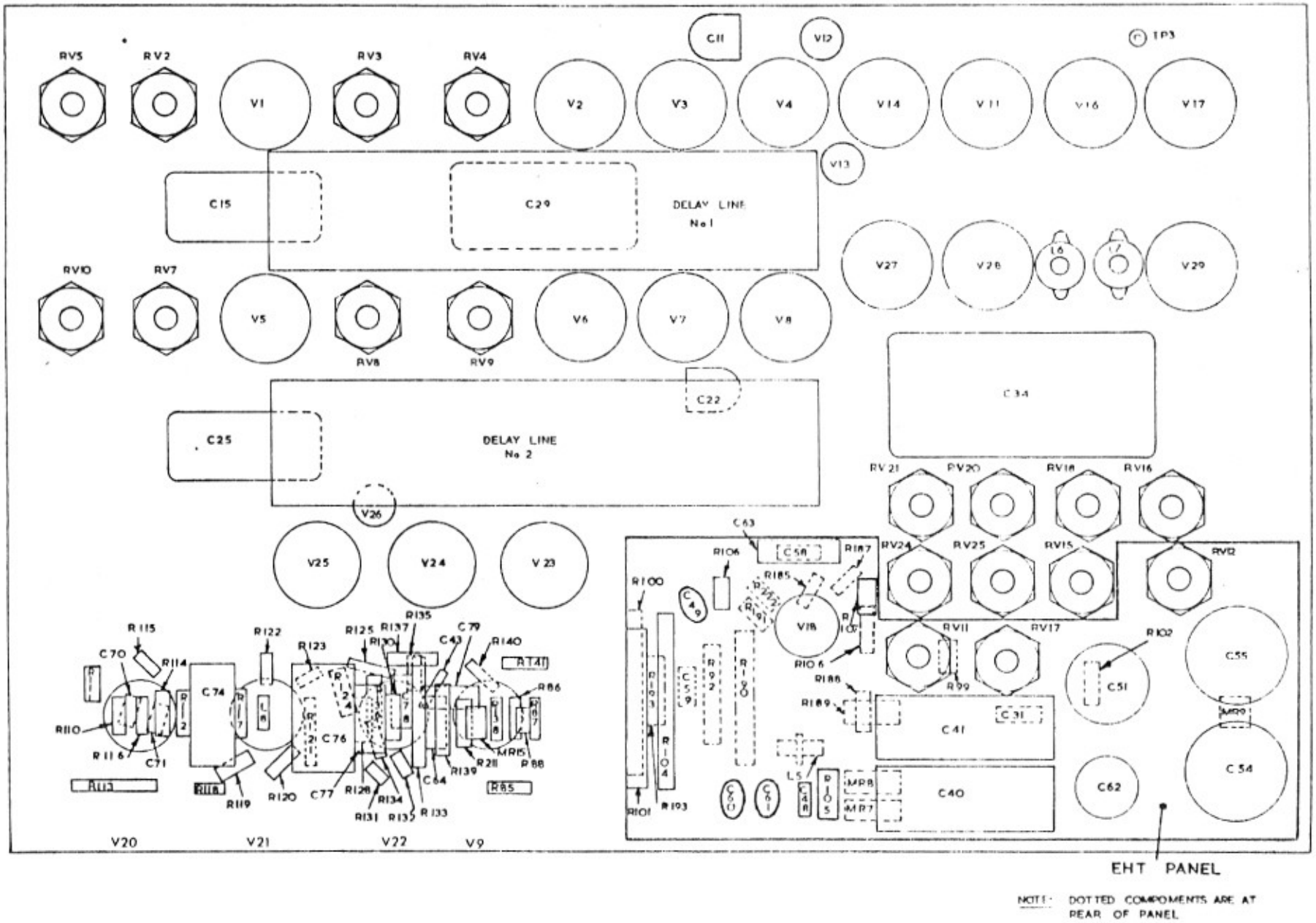

NOTE: DOTTED COMPONENTS ARE AT REAR OF PANEL

Fig. 23. Component location, Centre chassis, right hand view

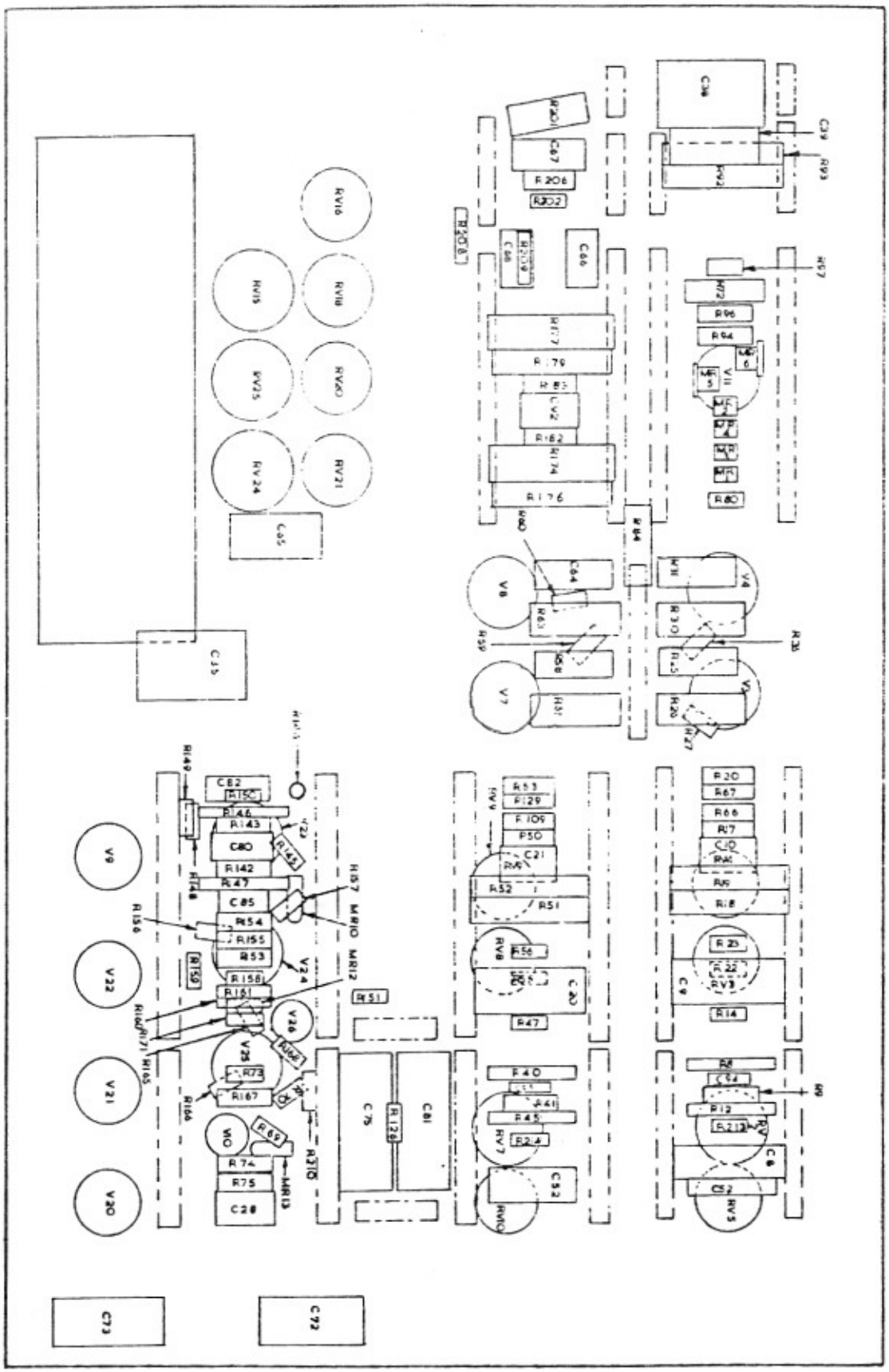

Fig. 24. Component location, Centre chassis, left hand view

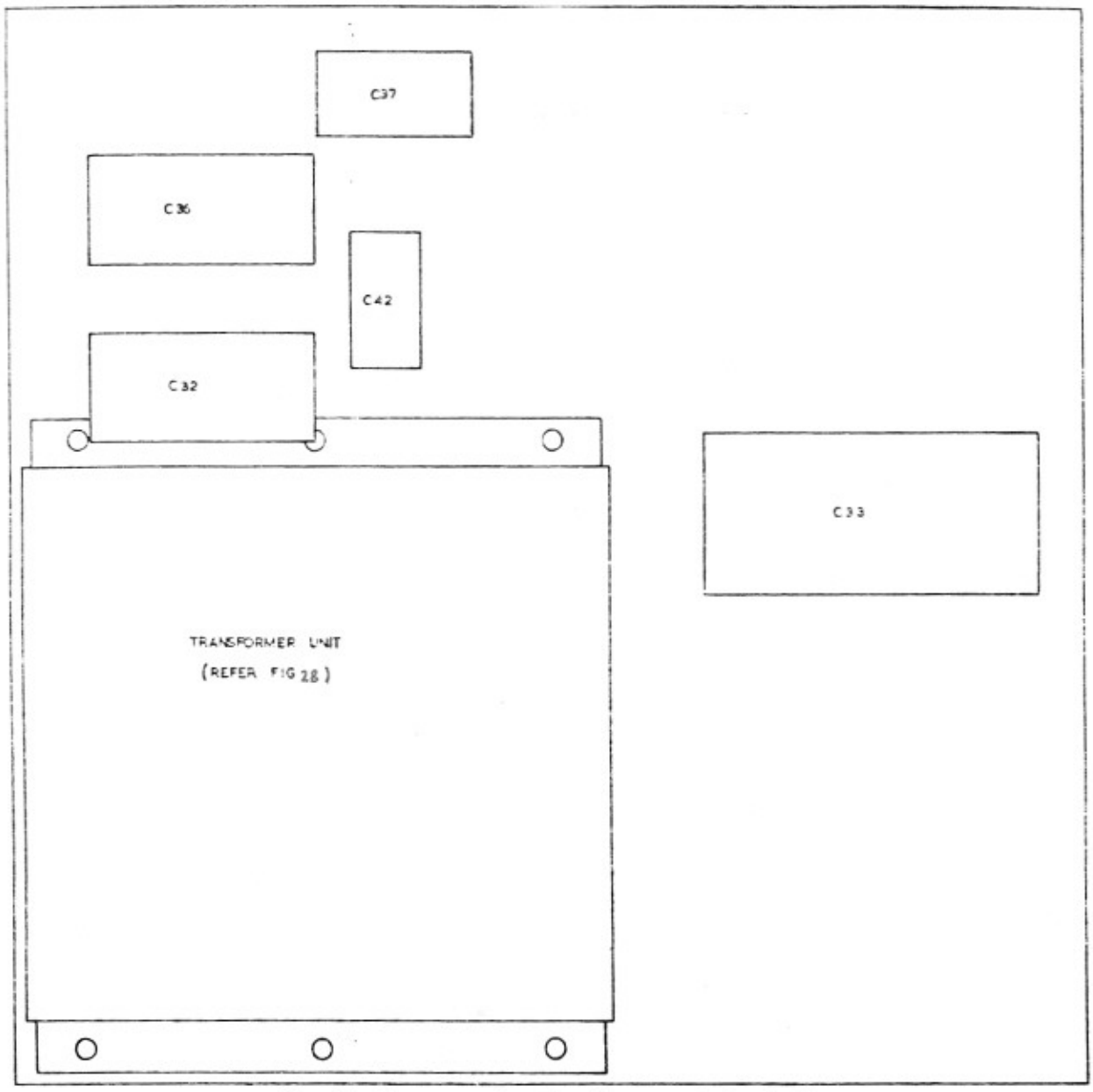

Fig. 25. Component location, Rear panel, front view

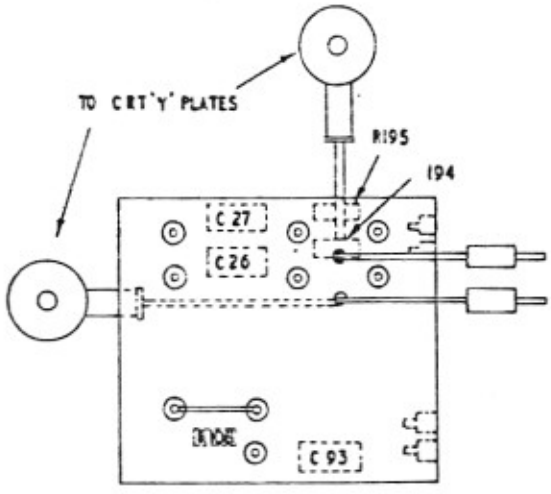

Fig. 26. Component location, Access panel

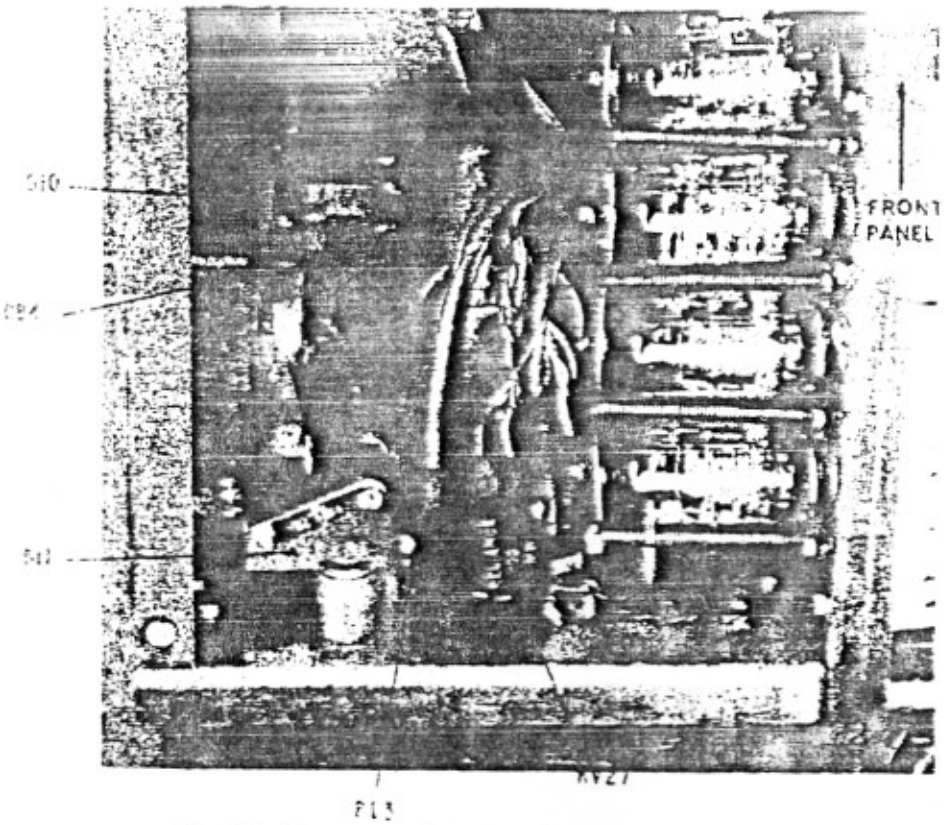

Fig. 27. Component location. Underside view

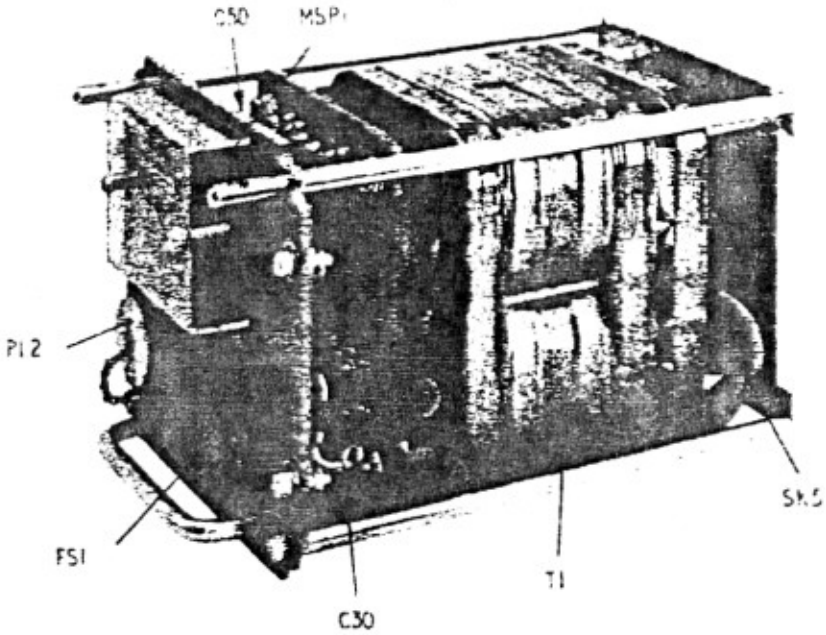

Fig. 28. Component location. Transformer unit.

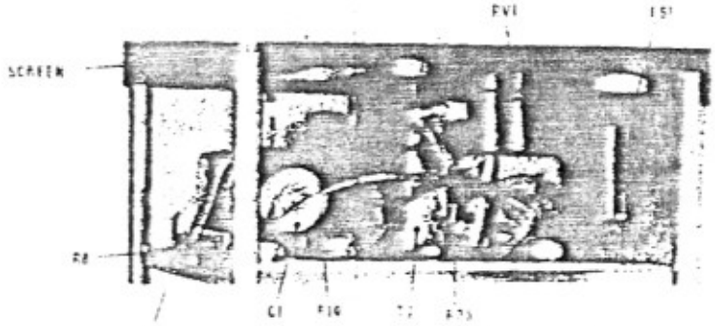

Sectional View of Transformer Assembly.

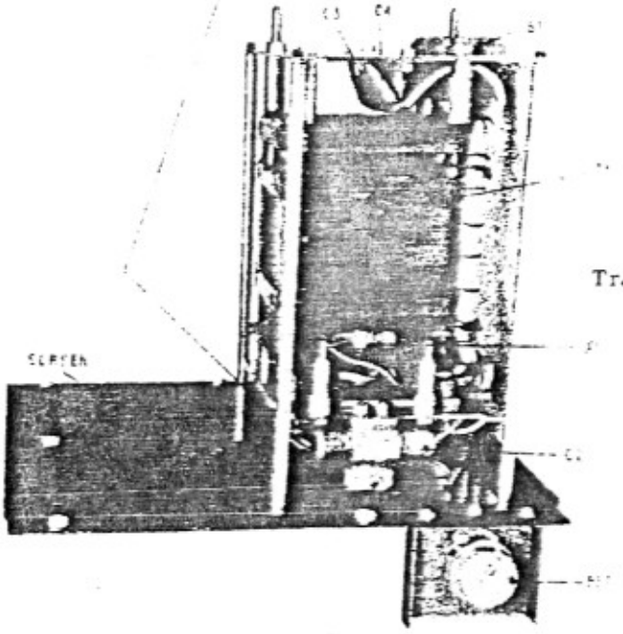

Transformer Assembly.

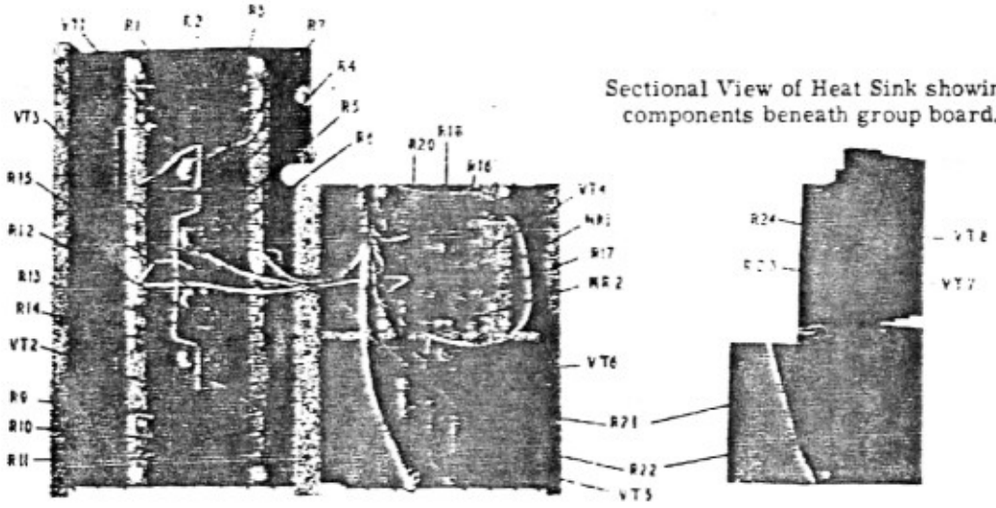

Sectional View of Heat Sink showing components beneath group board.

Transistor Heat Sink (Internal View).

Fig. 29. Component location, Converter direct Current.

RESISTORS	R12-14 R7 R15	R4-6 R9-11	R1-3	R16	R17 R18	R20	R21-22 R19 R23-24	R8 R26
CAPACITORS	C1	C2
MISCELLANEOUS	PL1	VT2	VT1	VT3	MR1	VT4	RV1	T2	MR2	VT5-6 VT7-8 FS1	T1	X1	SK1

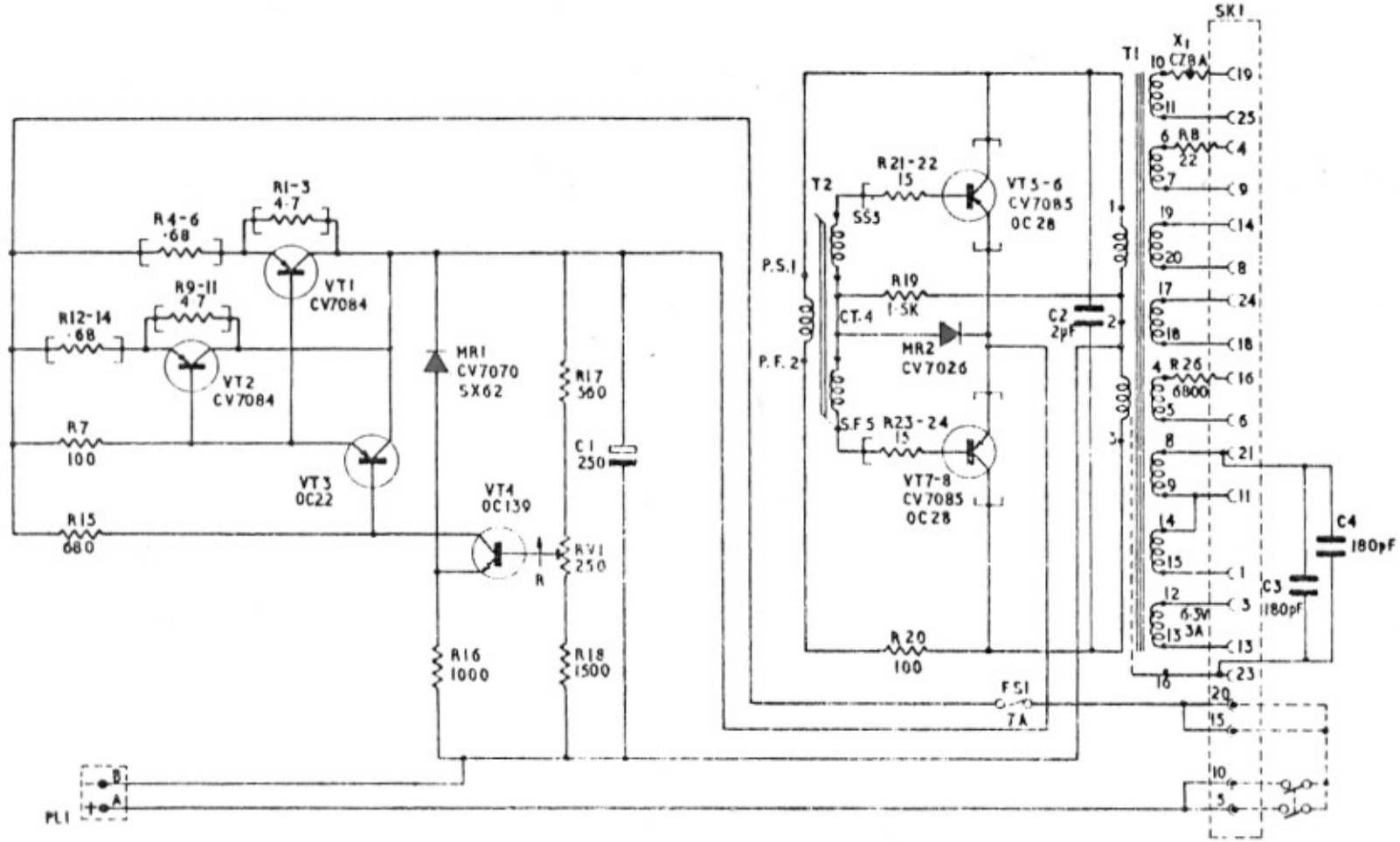

Fig. 31. The Converter direct Current. Circuit Diagram

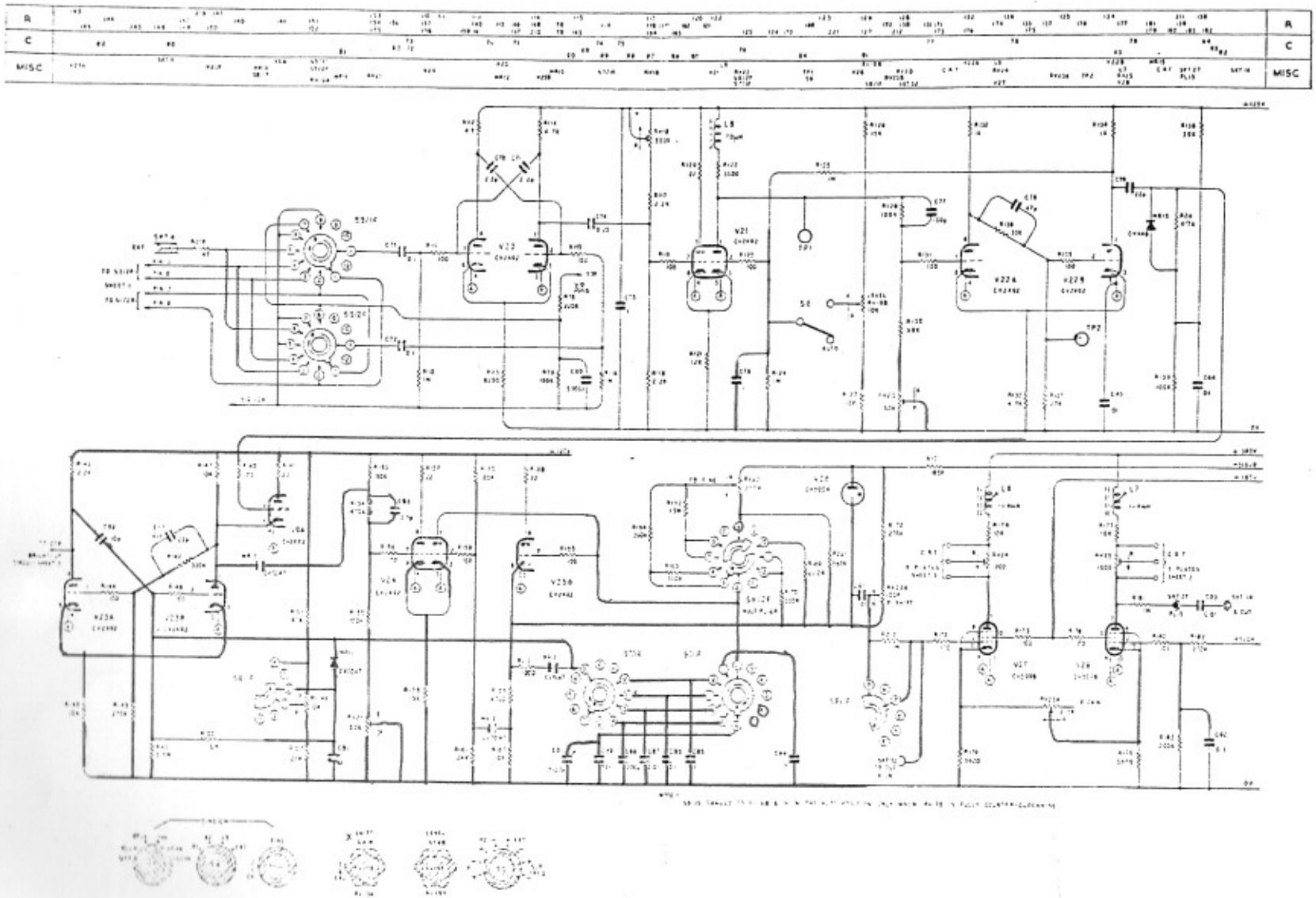

Fig. 33 The 'X' System

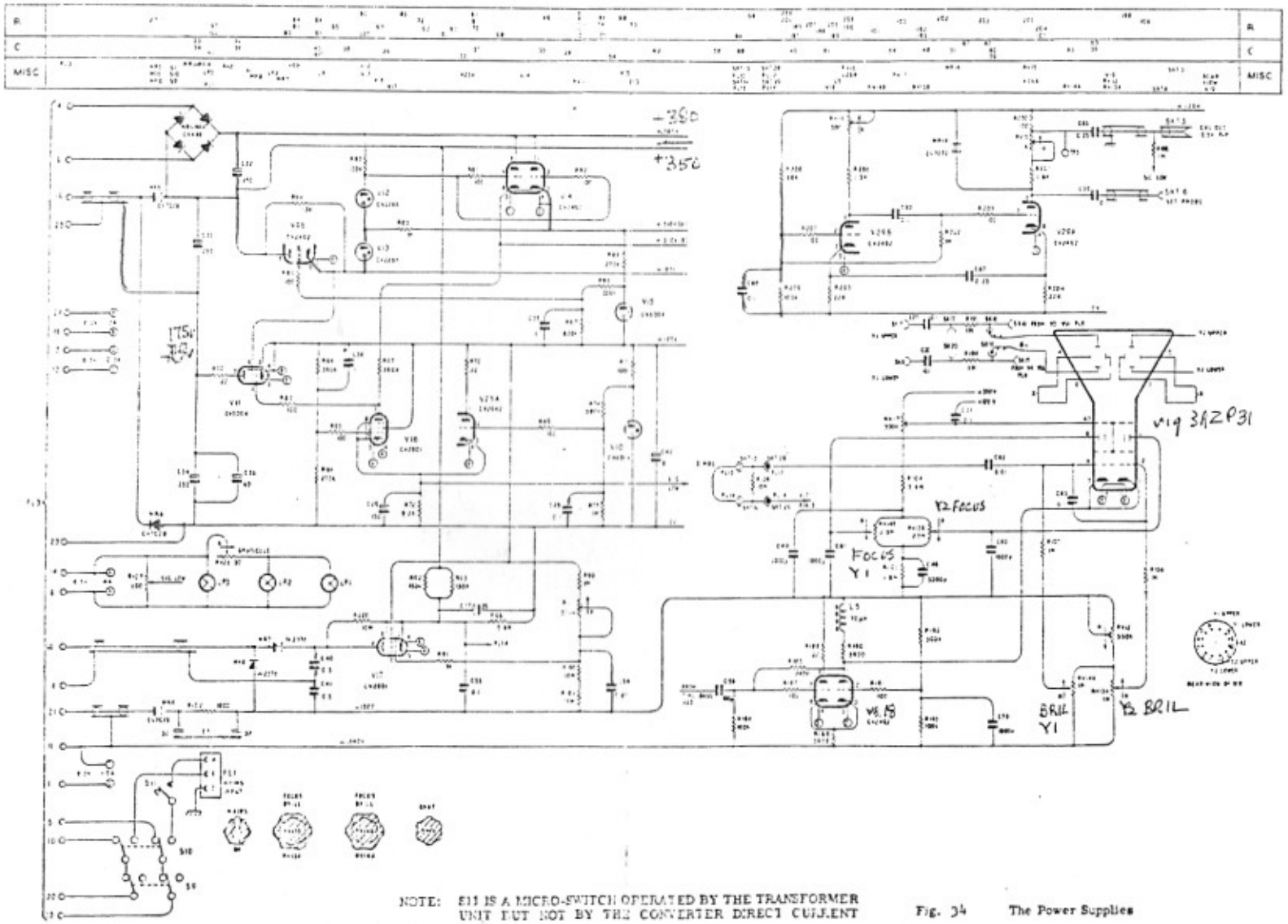

NOTE: S11 IS A MICRO-SWITCH OPERATED BY THE TRANSFORMER UNIT BUT NOT BY THE CONVERTER DIRECT CURRENT

Fig. 34 The Power Supplies

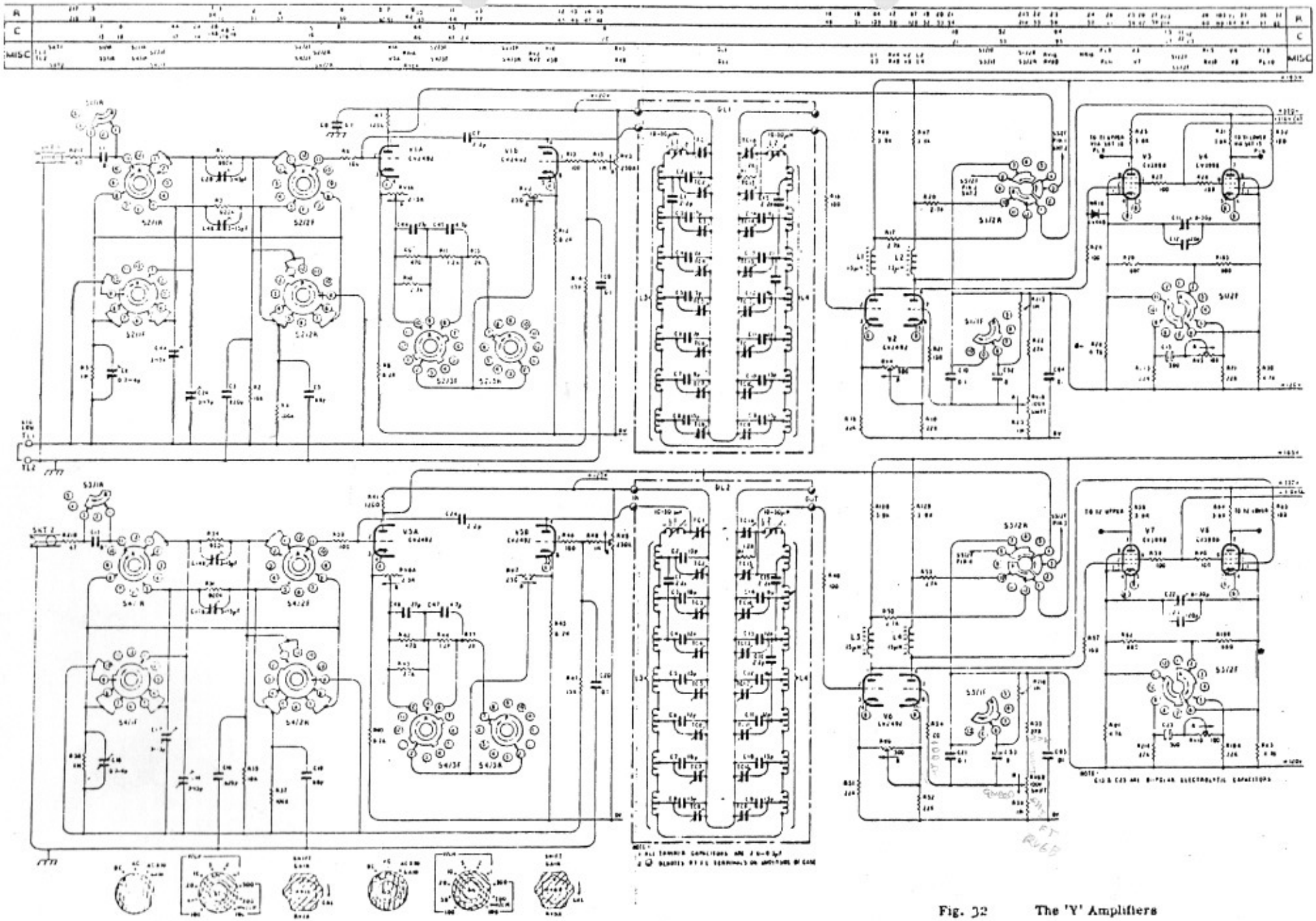

Fig. 32 The 'Y' Amplifiers

CT 436.

Issue No. 2.

Amendment No. 1.

Text.

Page 6, Line 2.

Amend Coax. Type from UR70 to UK76.

Diagrams.

Fig. 10.

(i) Amend the following component refs. viz.

R194	to	R195
R195	to	R194
C26	to	C27
C27	to	C26
SKT7	to	SKT8
SKT8	to	SKT7
SKT20	to	SKT17
SKT17	to	SKT20
SKT19	to	SKT16
SKT16	to	SKT19

Fig.17.

(i) Amend Circuit Reference V19 to read V18.

(ii) Add front panel control notations to controls RV13 and RV14 on circuit diagram as follows.

RV14B	;	Y1 FOCUS
RV13B	;	Y2 FOCUS
RV14A	;	Y1 BRILL
RV13A	;	Y2 BRILL

Fig. 30.

(i) Amend terminal numbering on transformer primary winding as follows :-

Terminal No.

6	to	1
7	to	2
8	to	3
9	to	4
10	to	5
1	to	6
2	to	7
3	to	8

Fig. 32.

(i) Lower ends of C9 and C20 are now connected to the SIG. LOW line and not to chassis.

(ii) Add front panel control notations to RV1A and RV6A as follows :-

RV1A ; Y1 GAIN
RV6A ; Y2 GAIN

(iii) Amend value of C23 to 82 pF.

(iv) Amend circuit notation +310 VA on Y2 channel, adjacent to V8, to read +310 VB.

Fig. 33.

(i) Amend value of R112 from 4.7 to 4.7K.

(ii) Add front panel control notation STAB to RV19A on circuit

(iii) Amend value of C64 from 0.1 to 0.01.

Fig. 34.

(i) Amend circuit notation C20 to read C26.

(ii) Add circuit reference and type No's V19, 3AZP31 to CRT.

(iii) Amend circuit reference V19 to read V18.

(iv) Add front panel control notation to RV13 and RV14 on circuit diagram as follows :-

RV14B ; Y1 FOCUS
RV13B ; Y2 FOCUS
RV14A ; Y1 BRILL
RV13A ; Y2 BRILL

Components List.

Resistors	:	R196 and R197 are not fitted
Capacitors	:	Delete J.S. Cat. No. from C23. Value and type now changed to 82 pF Suflex E.S. Po. C56 and C57 are not fitted.
Semiconductors	:	Add MR6 Silicon Diode : J.S. Cat. No. 000-7028.

436/